RESIDENTIAL

GAS WATER HEATERS
OWNER'S MANUAL

DIRECT VENT GAS MODELS GDVH/GDVS/XDVS

Thank you for buying this energy efficient water heater from A.O. Smith Water Products Company. We appreciate your confidence in our products.

You should thoroughly read this manual before installation and/or operation of this water heater. Please pay particular attention to the important safety and operating instructions as well as the WARNINGS and CAUTIONS.

WARNING: If the information in these instructions is not followed exactly, a fire or explosion may result causing property damage, personal injury or death.

- **Do not store or use gasoline or other flammable vapors and liquids in the vicinity of this or any other appliance.**
- **WHAT TO DO IF YOU SMELL GAS**
  - **Do not try to light any appliance.**
  - **Do not touch any electrical switch; do not use any phone in your building.**
  - **Immediately call your gas supplier from a neighbor's phone. Follow the gas supplier's instructions.**
  - **If you cannot reach your gas supplier, call the fire department.**
- **Installation and service must be performed by a qualified installer, service agency or the gas supplier.**

TABLE OF CONTENTS

	PAGE
GET TO KNOW YOUR WATER HEATER	2
GENERAL SAFETY INFORMATION	3
INSTALLATION	3-19
OPERATION	19-21
MAINTENANCE AND TROUBLESHOOTING	21-23
WARRANTY	24

CAUTION

TEXT PRINTED OR OUTLINED IN RED CONTAINS INFORMATION RELATIVE TO YOUR SAFETY. PLEASE READ THOROUGHLY BEFORE INSTALLING AND USING THIS APPLIANCE.

A.O.Smith Water Heaters

A DIVISION OF A.O. SMITH CORPORATION
www.aosmithwaterheaters.com

KEEP THIS MANUAL IN THE POCKET ON HEATER FOR FUTURE REFERENCE WHENEVER MAINTENANCE ADJUSTMENT OR SERVICE IS REQUIRED.

PRINTED IN U.S.A. 0106

PART NO. 184961-001

Downloaded from www.Manualslib.com manuals search engine

GET TO KNOW YOUR WATER HEATER

TYPICAL INSTALLATION

WARNING

DO NOT ATTEMPT TO OPERATE WATER HEATER WITH COLD WATER INLET VALVE CLOSED.

REPLACEMENT PARTS

Replacement parts may be ordered through authorized servicers or distributors. Refer to the Yellow Pages for where to call or contact A. O. Smith Water Products Company, 500 Tennessee Waltz Parkway, Ashland City, TN 37015, 1-800-433-2545. When ordering parts, provide complete model and serial numbers (see rating plate), quantity and name of part desired (as listed in Figure 1). Standard hardware items may be purchased locally.

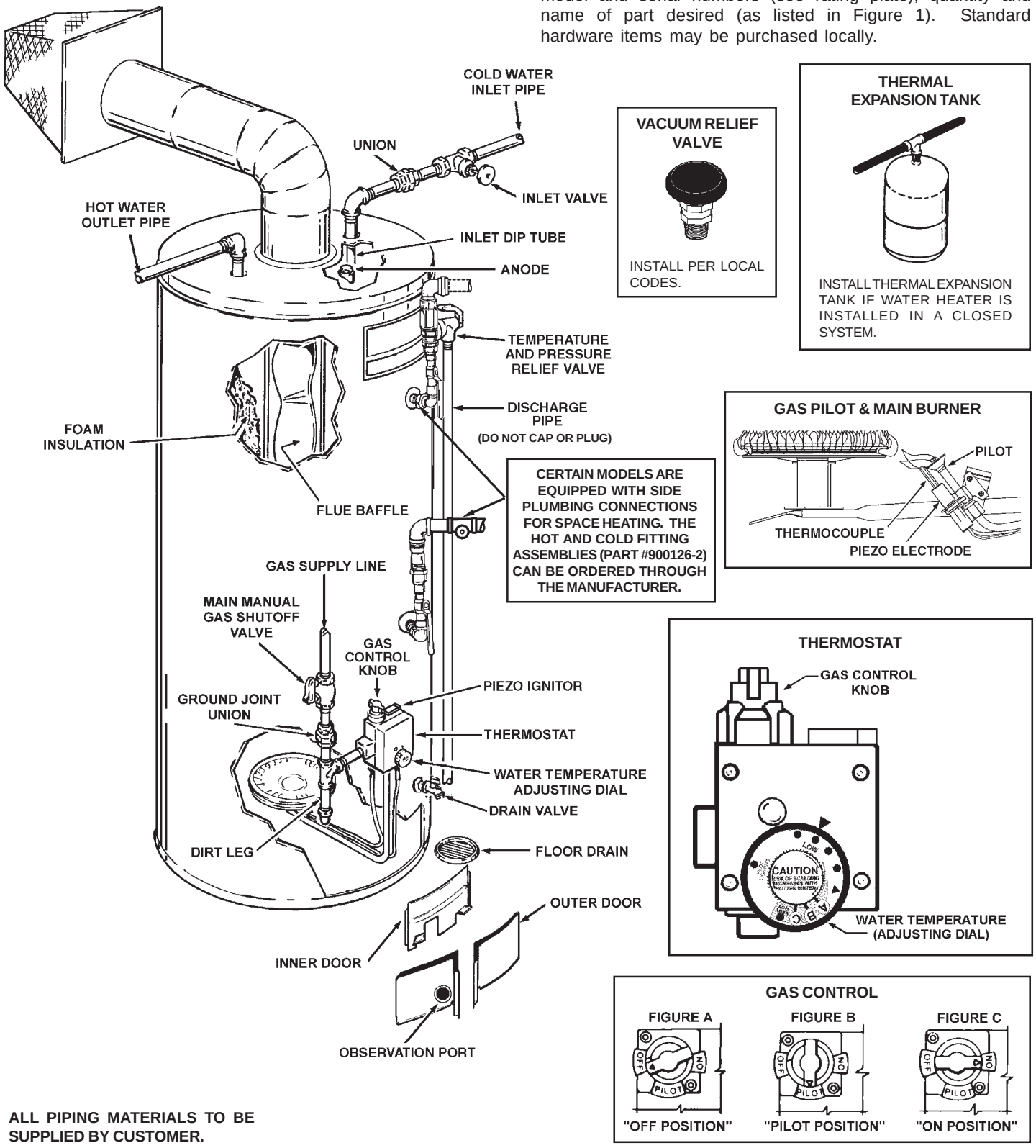

ALL PIPING MATERIALS TO BE SUPPLIED BY CUSTOMER.

FIGURE 1

Downloaded from www.Manualslib.com manuals search engine

GENERAL SAFETY INFORMATION

EXTERNAL DAMAGE

Do not operate the water heater until it has been fully checked out by a qualified technician, if the water heater:

- Has been exposed to fire or damage.
- Displays evidence of sooting.
- Produces steam or unusually hot water.

If the water heater has been flooded it must be replaced.

CHEMICAL VAPOR CORROSION

WARNING

CORROSION OF THE FLUEWAYS AND VENT SYSTEM MAY OCCUR IF AIR FOR COMBUSTION CONTAINS CERTAIN CHEMICAL VAPORS. SUCH CORROSION MAY RESULT IN FAILURE AND RISK OF ASPHYXIATION.

Spray can propellants, cleaning solvents, refrigerator and air conditioning refrigerants, swimming pool chemicals, calcium and sodium chloride (water softener salt), waxes and process chemicals are typical compounds which are potentially corrosive.

Do not store products of this sort near the heater. Also, air which is brought in contact with the heater should not contain any of these chemicals. If necessary, uncontaminated air should be obtained from remote or outside sources. The limited warranty is voided when failure of water heater is due to a corrosive atmosphere. (Refer to the limited warranty for complete terms and conditions).

EXTENDED NON-USE PERIODS

WARNING

HYDROGEN GAS CAN BE PRODUCED IN A HOT WATER SYSTEM SERVED BY THIS HEATER THAT HAS NOT BEEN USED FOR A LONG PERIOD OF TIME (GENERALLY TWO WEEKS OR MORE). HYDROGEN GAS IS EXTREMELY FLAMMABLE. To reduce the risk of injury under these conditions, it is recommended that the hot water faucet be opened for several minutes at the kitchen sink before using any electrical appliance connected to the hot water system. If hydrogen is present, there will probably be an unusual sound such as air escaping through the pipe as the water begins to flow. THERE SHOULD BE NO SMOKING OR OPEN FLAME NEAR THE FAUCET AT THE TIME IT IS OPEN.

INSULATION BLANKETS

Insulation blankets available to the general public for external use on gas water heaters are not necessary with A. O. Smith products. The purpose of an insulation blanket is to reduce the standby heat loss encountered with storage tank water heaters. Your A. O. Smith water heater meets or exceeds the National Appliance Energy Conservation Act standards with respect to insulation and standby loss requirements, making an insulation blanket unnecessary.

WARNING

Should you choose to apply an insulation blanket to this heater, you should follow these instructions (See Figure 1 for identification of components mentioned below). Failure to follow these instructions can restrict the air flow required for proper combustion, resulting in fire, asphyxiation, serious personal injury or death.

- Do not cover the outer door, thermostat or temperature & pressure relief valve.
- Do not cover the instruction manual. Keep it on the side of the water heater or nearby for future reference.
- Do obtain new warning and instruction labels from A.O. Smith for placement on the blanket directly over the existing labels.

INSTALLATION

REQUIRED ABILITY

INSTALLATION OR SERVICE OF THIS WATER HEATER REQUIRES ABILITY EQUIVALENT TO THAT OF A LICENSED TRADESMAN IN THE FIELD INVOLVED. PLUMBING, AIR SUPPLY, VENTING AND GAS SUPPLY ARE REQUIRED.

INSPECT SHIPMENT

There may be hidden damage caused in transit. Check to be certain all parts of the venting system, as listed below, are present. **CAUTION!!! IF THERE ARE ANY DAMAGED PARTS, DO NOT INSTALL THIS WATER HEATER. REPORT ANY SHORTAGE TO YOUR DISTRIBUTOR OR DAMAGE TO YOUR CARRIER.**

VENT KIT ASSEMBLY COMPONENTS

1	3” 90° elbow	1	Finishing collar (inside)
1	6” 90° elbow	1	Finishing collar (outside)
1	3” tube	1	Terminal Vent Cap Assembly
1	6” tube	1	Tube silicone sealant

GENERAL

The installation must conform to these instructions and the local code authority having jurisdiction. In the absence of local codes, the installation must comply with the current editions of the National Fuel Gas Code, ANSI Z223.1/NFPA 54. The code is available from the Canadian Standards Association, 8501 East Pleasant Valley Road, Cleveland, OH 44131.

FACTS TO CONSIDER ABOUT THE LOCATION

You should carefully choose an indoor location for the new water heater, because the placement is a very important consideration for the safety of the occupants in the building and for the most economical use of the appliance. This water heater is not for use in manufactured (mobile) homes or outdoor installation.

Whether replacing an old water heater or putting the water heater in a new location, the following critical points must be observed.

When installing the heater, consideration must be given to proper location. The water heater should be located as close to or centralized to the water piping system as possible. The water heater should be located in an area not subject to freezing temperatures.

THE HEATER SHOULD BE LOCATED IN AN AREA WHERE LEAKAGE OF THE TANK OR CONNECTIONS WILL NOT RESULT IN DAMAGE TO THE AREA ADJACENT TO THE HEATER OR TO LOWER FLOORS OF THE STRUCTURE. When such locations cannot be avoided, a suitable drain pan should be installed under the heater. Such pans should have a minimum length and width of at least 2

Downloaded from www.Manualslib.com manuals search engine

inches greater than the diameter of the heater and should be piped to an adequate drain. Drain pans suitable for these heaters are available from your dealer or A. O. Smith Water Products Company, 500 Tennessee Waltz Parkway, Ashland City, TN 37055. Contact us at our website: www.aosmithwaterheaters.com,phone: 800.433.2545, or fax: 1.800.433.2515.

Water heater life depends upon water quality, water pressure and the environment in which the water heater is installed. Water heaters are sometimes installed in locations where leakage may result in property damage, even with the use of a drain pan piped to a drain. However, unanticipated damage can be reduced or prevented by a leak detector or water shut-off device used in conjunction with a piped drain pan. These devices are available from some plumbing supply wholesalers and retailers, and detect and react to leakage in various ways:

- Sensors mounted in the drain pan that trigger an alarm or turn off the incoming water to the water heater when leakage is detected.
- Sensors mounted in the drain pan that turn off the water supply to the entire home when water is detected in the drain pan.
- Water supply shut-off devices that activate based on the water pressure differential between the cold water and hot water pipes connected to the water heater.
- Devices that will turn off the gas supply to a gas water heater while at the same time shutting off its water supply.

Under no circumstances is the manufacturer to be held liable for any water damage in connection with this water heater.

⚠ DANGER

⚠ Vapors from flammable liquids may explode and catch fire causing death or severe burns.

Do not use or store flammable products such as gasoline, solvents or adhesives in the same room or area near the water heater.

Keep flammable products:

1. far away from heater,
2. in approved containers,
3. tightly closed and
4. out of children's reach.

Water heater has a main burner and pilot flame. The pilot flame:

1. is on all the time and
2. will ignite flammable vapors.

Vapors:

1. cannot be seen,
2. are heavier than air,
3. go a long way on the floor and
4. can be carried from other rooms to the pilot flame by air currents.

Installation:
Do not install water heater where flammable products will be stored or used unless the main burner and pilot flames are at least 18" above the floor. This will reduce, but not eliminate the risk of vapors being ignited by the main burner or pilot flame.

The location selection must provide adequate clearances for servicing and proper operation of the water heater.

⚠ WARNING

DO NOT INSTALL THIS WATER HEATER DIRECTLY ON A CARPETED FLOOR. A FIRE HAZARD MAY RESULT. Instead the water heater must be placed on a metal or wood panel extending beyond the full width and depth by at least 3 inches (76.2mm) in any direction. If the heater is installed in a carpeted alcove or closet, the entire floor shall be covered by the panel.

Refer to Figure 1 for typical installation. A suitable pipe thread sealant must be used to prevent leakage.

WATER (POTABLE) HEATING AND SPACE HEATING

1. All piping components connected to this unit for space heating applications shall be suitable for use with potable water.
2. Toxic chemicals, such as those used for boiler treatment, shall NEVER be introduced into this system.
3. This unit may NEVER be connected to any existing heating system or component(s) previously used with a non-potable water heating appliance.
4. When the system requires water for space heating at temperatures higher than required for domestic water purposes, a tempering valve must be installed, see Figure 2 for suggested piping arrangement.

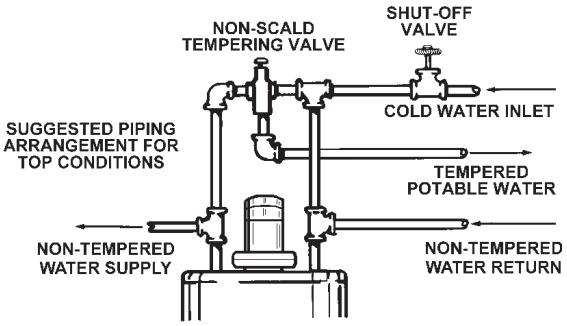

FIGURE 2

CLOSED WATER SYSTEM

A closed system will exist if a back-flow preventer (check valve), pressure reducing valve, or other similar device is installed in the cold water line between the water heater and the street main (or well). Excessive pressure may develop due to the thermal expansion of heated water causing premature tank failure or intermittent relief valve operation. This type of failure is not covered by the limited warranty. An expansion tank may be necessary in the cold water supply to alleviate this situation, see Figure 1. Contact the local plumbing authority.

If the temperature and pressure relief valve on the appliance discharges periodically, this may be due to thermal expansion in a closed water supply system. Contact the water supplier or local plumbing inspector on how to correct this situation. DO NOT PLUG THE TEMPERATURE AND PRESSURE RELIEF VALVE.

GAS CONNECTIONS

The minimum gas supply pressure for input adjustment is 5.0" W.C. (1.2 kPa) for natural gas and 11.0" W.C. for propane gas. THE HEATER IS NOT INTENDED FOR OPERATION AT HIGHER THAN 10.5" WATER COLUMN (2.6 kPa) SUPPLY PRESSURE. EXPOSURE TO HIGHER GAS SUPPLY PRESSURE MAY CAUSE DAMAGE TO THE CONTROL WHICH COULD RESULT IN FIRE OR EXPLOSION. If over-pressure has occurred such as through improper testing of gas lines or emergency malfunction of the supply system, the control must be checked for safe operation.

Downloaded from www.Manualslib.com manuals search engine

Make sure that the outside vents on the supply regulators and the safety vent valves are protected against blockage. These are parts of the gas supply system not the heater. Vent blockage may occur during ice storms.

IT IS IMPORTANT TO GUARD AGAINST CONTROL FOULING FROM CONTAMINANTS IN THE GAS WAYS. SUCH FOULING MAY CAUSE IMPROPER OPERATION, FIRE OR EXPLOSION.

All piping must comply with local codes and ordinances or with the current edition of National Fuel Gas Code (ANSI Z223.1/ NFPA-54) whichever applies.

REFER TO FIGURE 1 FOR CONNECTION DETAILS. BEFORE ATTACHING THE GAS LINE BE SURE THAT ALL GAS PIPE IS CLEAN ON THE INSIDE.

TO TRAP ANY DIRT OR FOREIGN MATERIAL IN THE GAS SUPPLY LINE, A DIRT LEG (SOMETIMES CALLED DRIP LEG) MUST BE INCORPORATED IN THE PIPING, FIGURE 1. The dirt leg must be readily accessible. Install in accordance with recommendations of serving gas supplier. Refer to the latest edition of the National Fuel Gas Code ANSI Z223.1.

To prevent damage, care must be taken not to apply too much torque when attaching gas supply pipe to thermostat gas inlet. The thermostat inlet has a pad for use with a backup wrench.

Apply joint compounds (pipe dope) sparingly and only to the male threads of pipe joints. Do not apply compound to the first two threads. Use compounds resistant to the action of liquefied petroleum gases. Do not use teflon tape on thermostat fittings.

DISCONNECT THE APPLIANCE FROM THE GAS SUPPLY PIPING SYSTEM DURING ANY SUPPLY PRESSURE TESTING EXCEEDING 1/2 PSI (3.5 kPa). GAS SUPPLY LINE MUST BE CAPPED WHEN DISCONNECTED FROM THE HEATER. FOR TEST PRESSURES AT 1/2 PSI (3.5 kPa) OR LESS, THE APPLIANCE NEED NOT BE DISCONNECTED, BUT MUST BE ISOLATED FROM THE SUPPLY PRESSURE TEST BY CLOSING THE MAIN MANUAL GAS VALVE.

BEFORE PLACING THE HEATER IN OPERATION, CHECK FOR GAS LEAKAGE. USE SOAP AND WATER SOLUTION OR OTHER MATERIAL ACCEPTABLE FOR THIS PURPOSE. DO NOT USE MATCHES, CANDLES, FLAME OR OTHER SOURCES OF IGNITION TO LOCATE GAS LEAKS.

RELIEF VALVE

A NEW TEMPERATURE AND PRESSURE RELIEF VALVE COMPLYING WITH THE STANDARD FOR RELIEF VALVES AND AUTOMATIC GAS SHUT OFF DEVICES FOR HOT WATER SUPPLY SYSTEMS, ANSI Z21.22 (CURRENT EDITION) MUST BE INSTALLED IN THE HEATER IN THE MARKED OPENING PROVIDED, SEE FIGURE 1. THE VALVE MUST BE OF A SIZE (INPUT RATING) THAT WILL BE ADEQUATE FOR YOUR SIZE HEATER.

Check the metal tag on the relief valve and compare it to the heater's rating plate. The pressure rating of the relief valve must not exceed the working pressure shown on the rating plate of the heater. In addition, the hourly BTU rated temperature steam discharge capacity of the relief valve shall not be less than the input rating of the heater. NO VALVE IS TO BE PLACED BETWEEN THE RELIEF VALVE AND TANK. DO NOT PLUG THE RELIEF VALVE.

The drain line connected to this valve must not contain a reducing coupling or other restriction and must terminate near a suitable drain to prevent water damage during valve operation. The discharge line shall be installed in a manner to allow complete drainage of both the valve and line. DO NOT THREAD, PLUG OR CAP THE END OF THE DRAIN LINE.

VENTING

WARNING

NEVER OPERATE THE HEATER UNLESS IT IS VENTED TO THE OUTDOORS AND HAS ADEQUATE AIR SUPPLY TO AVOID RISKS OF IMPROPER OPERATION, FIRE, EXPLOSION OR ASPHYXIATION.

DO NOT OBSTRUCT THE FLOW OF COMBUSTION AND VENTILATING AIR. ADEQUATE AIR FOR COMBUSTION AND VENTILATION MUST BE PROVIDED FOR SAFE OPERATION.

VENT PIPE TERMINATION

Before installing water heater determine placement of vent pipe termination.

MAKE CERTAIN TO OBSERVE VENT LOCATION LIMITATION, SEE FIGURES 4 & 5.

CAUTION

Use only the vent kit assembly supplied with this water heater or if needed one of the three listed optional flue extensions. See Figure 10 for possible combinations. VENTING OR TERMINATION WITH ANY OTHER KIT NOT LISTED IS NOT RECOMMENDED AND COULD AFFECT THE SYSTEMS PERFORMANCE AND RESULT IN A SAFETY HAZARD.

WARNING

MINIMUM CLEARANCES BETWEEN THE WATER HEATER AND COMBUSTIBLE AND NONCOMBUSTIBLE CONSTRUCTION ARE: 0 INCHES FROM SIDES, 0 INCHES FROM BACK, 4 INCHES FROM FRONT OF JACKET TO CLOSET DOOR AND 3 INCHES FROM TOP OF JACKET TO COMBUSTIBLE AND NONCOMBUSTIBLE MATERIAL. MINIMUM VENT CLEARANCE: 0 INCHES. PROVIDE 24 INCHES FRONT CLEARANCE FOR SERVICING AND ADEQUATE CLEARANCE BETWEEN THE JACKET TOP & CEILING FOR SERVICING THE FLUE AREA , SEE FIGURES 3 AND 3A.

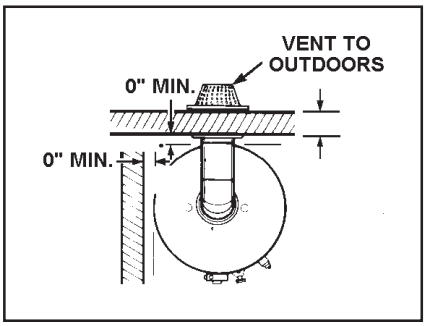

FIGURE 3

Downloaded from www.Manualslib.com manuals search engine

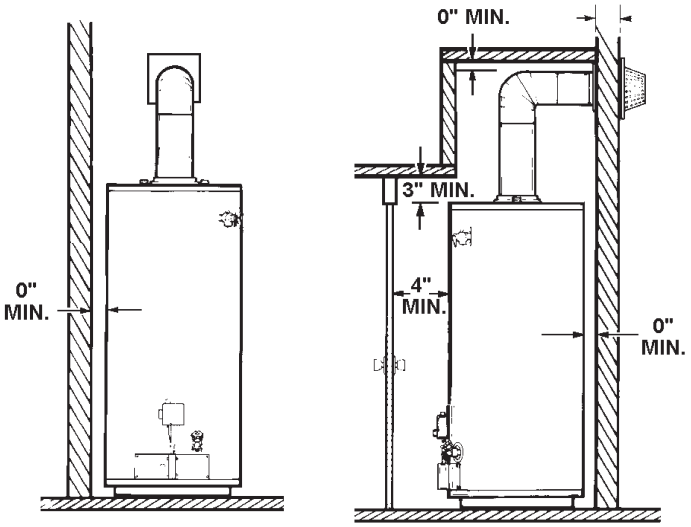

FIGURE 3A

COMBUSTION AIR AND VENTILATION

When determining the installation location for a direct vent water heater, snow accumulation and drifting should be considered in areas where applicable.

VENTING CLEARANCES

- 18” minimum in all directions from any obstruction that may interfere.
- 18” minimum from the ground and 12” from ceiling overhangs, see Figure 4.
- The direct vent terminal shall terminate at least 3 feet above any forced air inlet located within 10 feet, see Figure 5.
- 9” minimum horizontally from or above any door, window or gravity air inlet into the building (50,000 BtuH input or less.)
- 12” minimum horizontally from or above any door, window or gravity air inlet into the building (over 50,000 BtuH input).
- 12” minimum below any door, window or gravity air inlet into the building (50,000 BtuH input or less).
- 18” minimum below any door, window or gravity air inlet into the building (over 50,000 BtuH input).
- 18” minimum from other gravity or natural appliance outlet vents when directly above or 135° to either side of center line, see Figure 6.
- 36” minimum from any outlet vents when directly below or 45° to either side of center line, see Figure 7.
- 36” minimum in all directions from any other forced air appliance outlet vent, see Figure 7.
- The location selection must provide clearances for servicing and proper operation of the water heater, see Figure 8.
- Vent termination must not be within 4 feet of any items such as gas meters, gas valves or other gas regulating equipment.

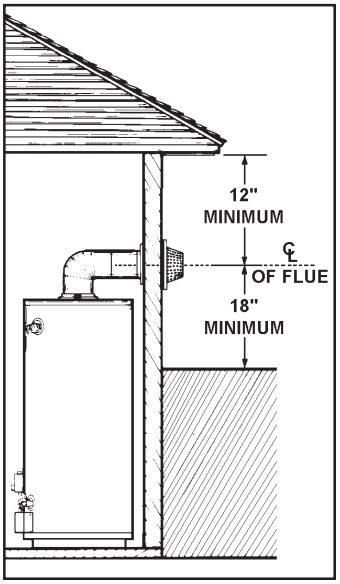

FIGURE 4

WARNING

Vent termination must not be within 4 feet of any items such as gas meters, gas valves or other gas regulating equipment.

OPTIONAL WIRE GRILL

When the water heater vent cap is low enough to be touched accidentally, or is accessible to small children, installation of a protective vent cover is recommended. Some local codes may require a vent cap cover. Figure 9 shows the optional wire vent cap protector available from the water heater manufacturer.

A wire mesh chain link fence (as shown in Figure 9) may be used instead of the factory cover. Care should be taken to maintain adequate ventilation around the vent cap. If a chain link fence is installed, it must not be used as a storage area for items that may block proper ventilation.

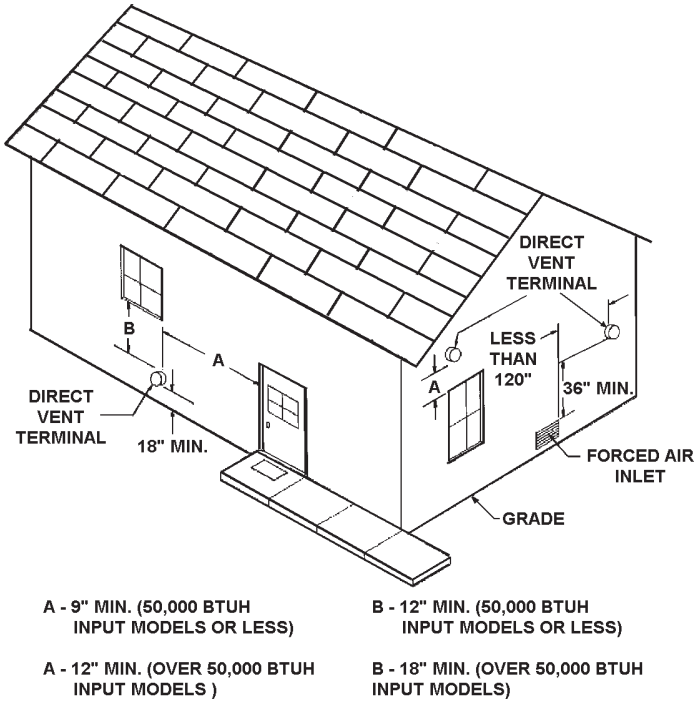

FIGURE 5

Downloaded from www.Manualslib.com manuals search engine

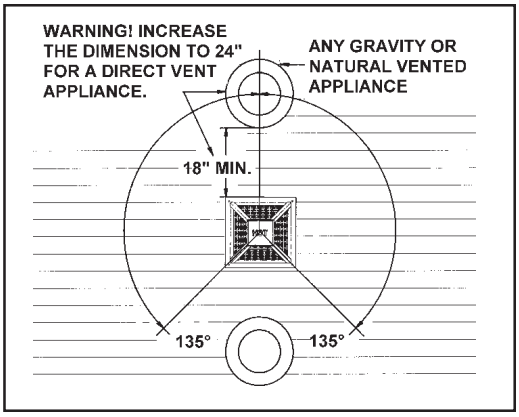

FIGURE 6

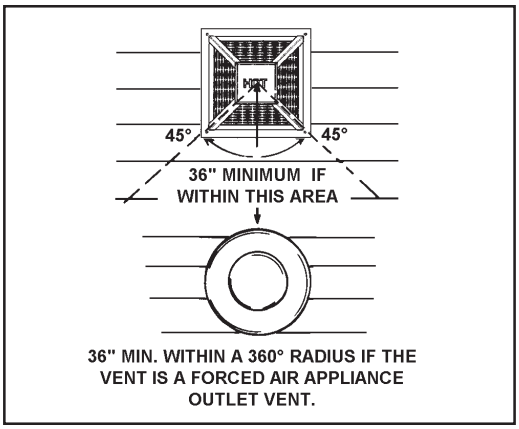

FIGURE 7

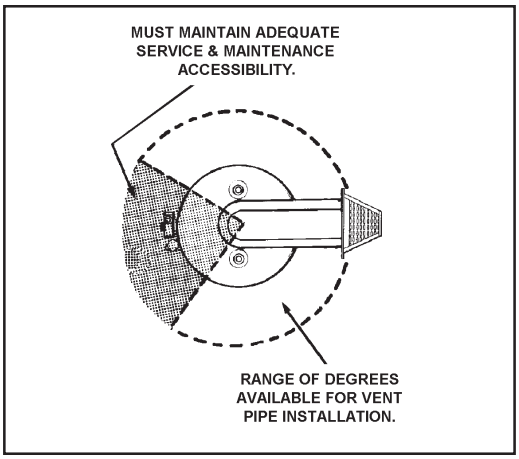

FIGURE 8

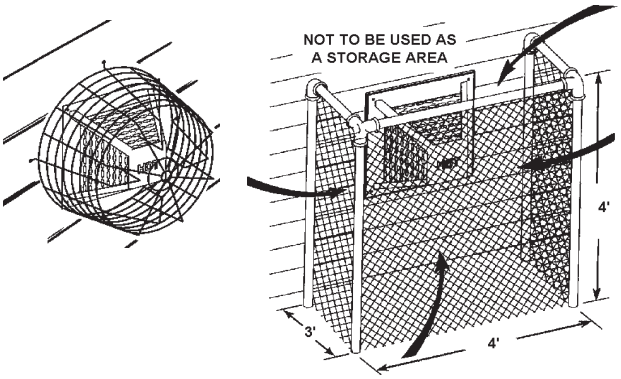

FIGURE 9

FLUE EXTENSIONS

There are three optional extension kits available. Any combination of the three kits can be chosen; however, only one kit can be used vertically and/or horizontally, see Figures 10 and 11.

WARNING

At no time can more than one Vertical and/or one Horizontal Vent Kit be used.

Unless otherwise specified at the time of ordering, a standard extension kit is individually packaged and shipped within the water heater carton.

POSSIBLE EXTENSION COMBINATIONS

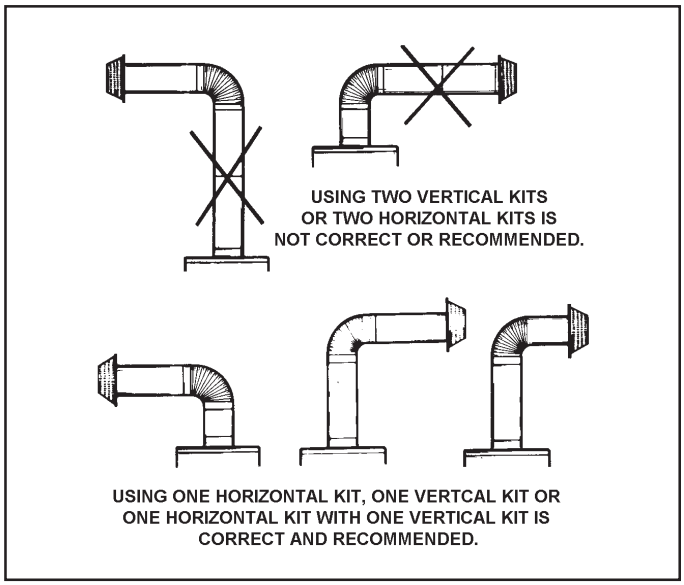

FIGURE 10

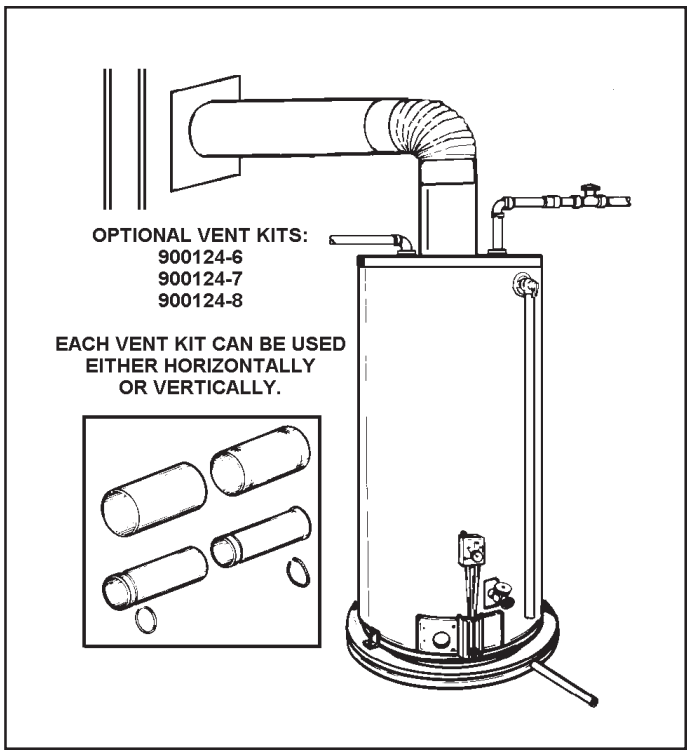

FIGURE 11

Downloaded from www.Manualslib.com manuals search engine

VERTICAL (EXTENSION KIT) HEIGHT

It is simple to determine which kit is needed for vertical height. Take the total height (to the top of the flue) required and comparing that to "F DIMENSION" in TABLE 1, it can be determined which kit needs to be used vertically.

WARNING

Obstructions and deteriorated vent systems may present serious health risk or asphyxiation.

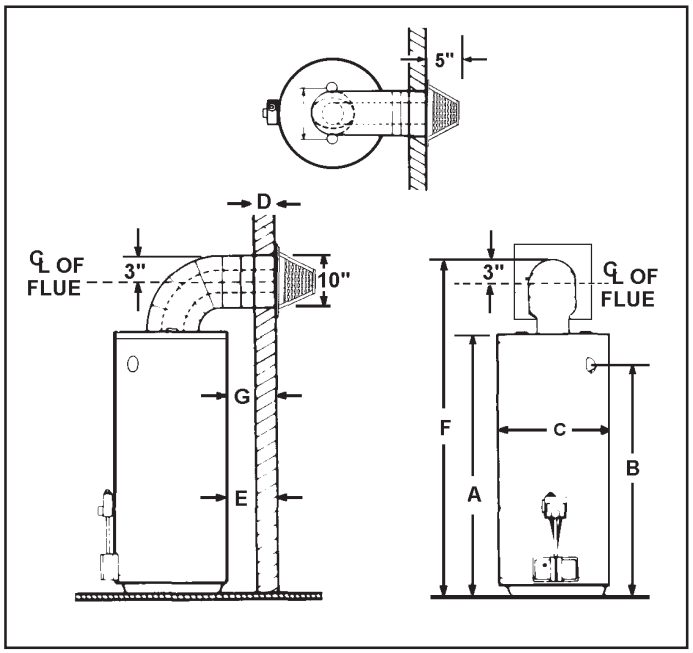

FIGURE 12

TABLE 1.

*GAL. CAP.	BTU's in 1000's NAT/L.P.	F DIMENSION 900068-7 STD.	900124-6 MIN.	900124-6 MAX.	900124-7 MIN.	900124-7 MAX.	900124-8 MIN.	900124-8 MAX.
40	36/36	63-3/4	72	77	77	88	88	110
50	38/38	72	80-3/4	86	86-1/4	97-1/4	97-1/4	118-3/4
40	40/40	63-3/4	72	77	77	88	88	110
50	48/44	76	84-1/4	89-3/4	89-3/4	100-3/4	100-3/4	122-3/4
75	55 NAT.	76-1/4	84-1/2	89-1/2	89-1/2	100-1/2	100-1/2	122-1/2

* See models and rating plate attached to the water heater for specific model number and other detailed information.

HORIZONTAL (EXTENSION KIT)

To determine the horizontal length and extension kit needed, simply plug the dimensions "D" and "G" into the equation below. The answer "E" should then be located in TABLE 2. The size range in which "E" dimension falls indicates the kit that should be used horizontally to obtain the desired length.

EQUATION: D + G = E

"D" = The wall thickness

"G" = The distance wanted between the edge of the water heater and the inside edge of the wall

"E" = The distance the extension kit must be able to extend

TABLE 2.

VENT KITS	E DIMENSIONS 40-50 Gal. MIN.	40-50 Gal. MAX.	75 Gal. MIN.	75 Gal. MAX.
900068-7-STD.	3-1/2	10	7/8	7-3/8
900124-6	10	15-1/2	7-3/8	12-7/8
900124-7	15-1/2	26-1/2	12-7/8	23-7/8
900124-8	26-1/2	48	23-7/8	45-3/8

*GAL. CAP.	*BTU'S in 1000's NAT/L.P.	A	B	C
40	36/36	48-3/4	41-3/4	21
50	38/38	57-1/2	50-1/2	21
40	40/40	48-3/4	41-3/4	21
50	48/44	61	54	21
75	55 NAT.	63	54-3/4	26-1/4

*See models and rating plate attached to the water heater for specific model number and other detailed information.

WARNING

Be sure vent pipe is properly connected to prevent escape of dangerous flue gases which could cause deadly asphyxiation.

ALL INSTALLATIONS

For ease of assembly the installation of the various kit combinations has been broken into individual sections. The two steps below are common to all installations. Once these have been performed, you need only to refer to the type installation that pertains to you.

Installation Using Vent Kits:

1. **Standard Vent Kit ..... Page 8**
2. **Optional Vertical Vent Kit ..... Page 10 with Standard Vent Kit**
3. **Optional Horizontal Vent Kit ..... Page 13**
4. **Optional Horizontal and ..... Page 15 Vertical Vent Kits**

CUTTING THE OPENING THROUGH THE OUTSIDE WALL

After thoroughly reading the "Locating the New Water Heater" section of this manual and you have chosen a suitable water heater installation site, use the chart below to determine dimensions for the opening in the wall.

Cut a $6^{1}/_{4}$" diameter hole completely through the outside wall.

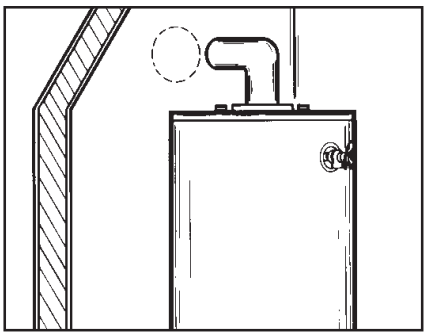

FIGURE 13

Downloaded from www.Manualslib.com manuals search engine

WATER HEATER ATTITUDE

There is a certain amount of variation permissible with regard to the direction the water heater faces.

Standing in front of the water heater (gas control facing you), set the 3" diameter elbow (slotted end) on the flue. This will give you a better understanding of the relation of the vent assembly to the opening in the wall and more importantly any possibly of interference of venting and water piping.

The direction of the water heater can now be made. Also consider the gas control valve to insure installation, lighting, and maintenance accessibility are retained.

STANDARD VENT KIT INSTALLATION #1

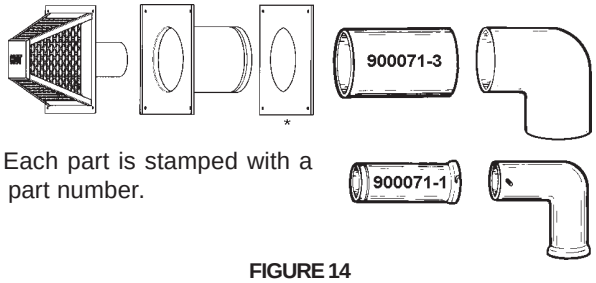

* Each part is stamped with a part number.

FIGURE 14

The opening through the wall should be cut at this time. If it hasn't been, refer back to that section.

1. Lock the elbow to the straight 3" flue pipe. Set this assembly in place on the end of the water heater's flue collar.

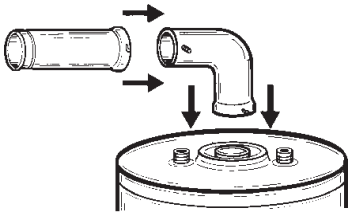

FIGURE 15

2. Mark the flue collar at the slots in the elbow. Using a #22 drill bit, drill holes into the flue collar at the two slots and secure the elbow to the flue collar using the screws provided.

   NOTE: Make sure elbow is properly aligned to opening in the outside wall.

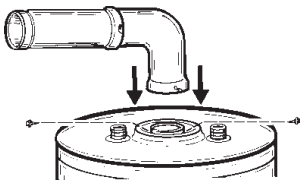

FIGURE 16

3. Using the tube of sealant supplied, run an ample amount around the oval flare of the jacket.

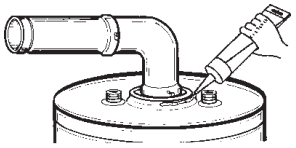

FIGURE 17

4. First remove the 3" horizontal extension from the elbow. Starting with the long end (with four securing holes), place the 6" diameter vent elbow over the 3" diameter elbow. Bend the round end "oval" to fit the flared oval end of the jacket top.

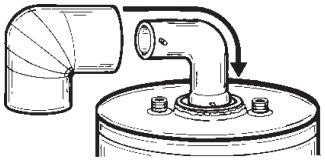

FIGURE 18

5. Making sure the 6" diameter elbow is centered around the 3" diameter flue, secure the 6" diameter vent pipe using four sheet metal screws at the connection of the jacket top.

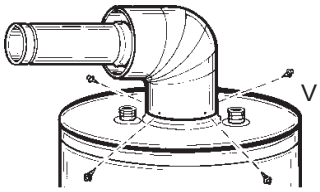

FIGURE 19

6. The standard vent kit includes a 6" diameter extension pipe which is used when "E" dimension is over 6 1/2".

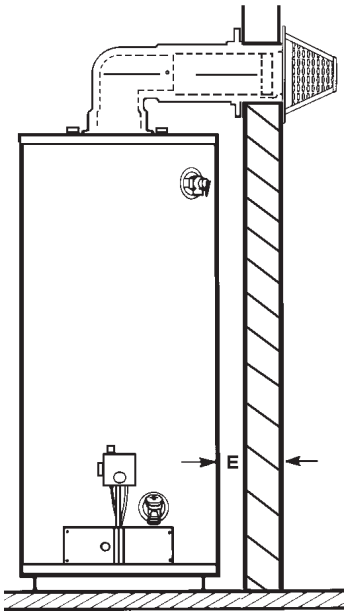

FIGURE 20

7. If "E" is less than 6 1/2" move to next step.

   If "E" dimension is over 6 1/2", assemble the 6" diameter extension pipe (crimped end) to the 6" diameter vent elbow and secure using two sheet metal screws.

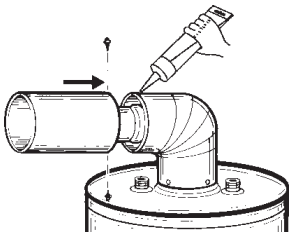

FIGURE 21

Downloaded from www.Manualslib.com manuals search engine

8. Slide the vent collar (to be installed later) over the 6” vent elbow.

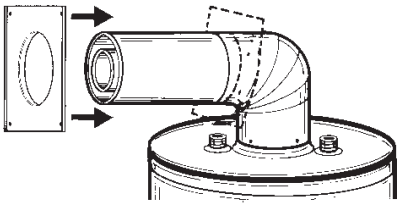

FIGURE 22

9. Place the water heater at the opening in the wall, at the predetermined clearance.

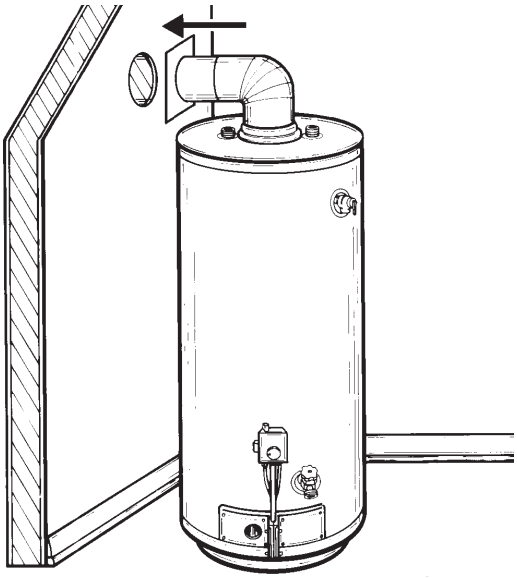

FIGURE 23

10. Move outdoors with all the remaining vent parts. Using the tube of sealant supplied, run an ample amount on the inside surface of the collar assembly that will contact the exterior wall and also fill the bead on the end of the 6” diameter vent collar.

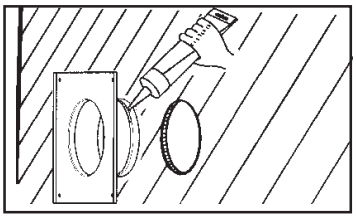

FIGURE 24

11. Install the vent collar assembly through the wall, connecting it to the extension and/or elbow (depending on which one was used).

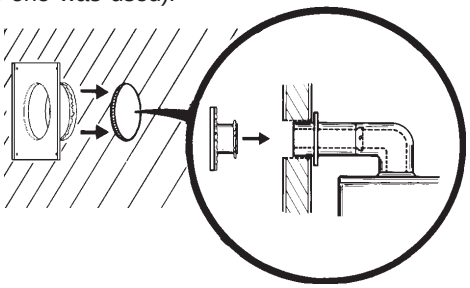

FIGURE 25

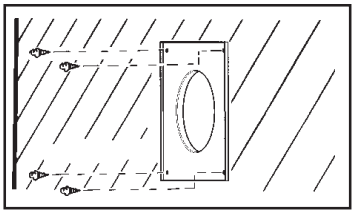

FIGURE 26

12. Four wood screws are supplied to temporarily attach the collar to the exterior wall of the building. However, other types of screws may have to be substituted depending on the material used in the construction of the exterior wall.

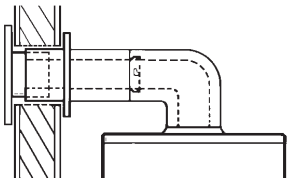

FIGURE 27

13. Insert the 3” diameter flue extension pipe into the vent collar assembly (flared & notched end first) and lock (turn clockwise to lock studs to slots) the flue extension pipe to the flue elbow.

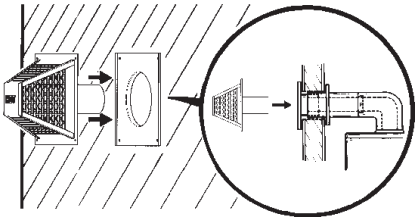

FIGURE 28

14. Connect the vent cap by sliding its end over the 3” diameter extension pipe and O-ring.

NOTE: To facilitate ease of assembly of the vent cap to the 3” pipe, a soap solution can be applied to the O-ring gasket.

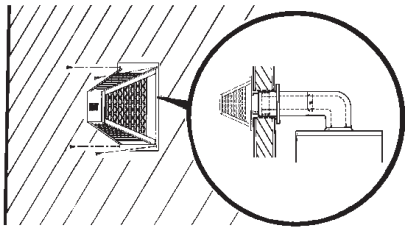

FIGURE 29

15. The vent cap has 4 holes around the outer edge. Remove the 4 screws used to temporarily attach the collar to the exterior wall. Then secure the vent cap assembly with the vent collar assembly to the exterior wall using the same 4 screws.

NOTE: Screws are supplied; however, substitution may be necessary depending on the exterior wall material.

CAUTION

To prevent unlocking the previously installed 3” diameter extension, the vent cap assembly must be rotated in a clockwise motion when the vent cap is installed.

Downloaded from www.Manualslib.com manuals search engine

16. Go back indoors to attach inside collar to the inside wall. Place the collar against the wall. Secure to wall by using 4 long sheet metal screws.

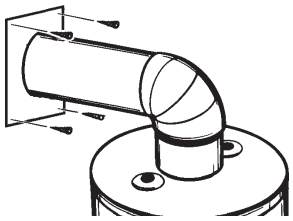

FIGURE 30

NOTE: Screws are supplied; however, substitution may be necessary depending on the interior wall material.

17. Using the tube of sealant supplied, run an ample amount of sealant around the edge of the vent pipe where it is inserted through the inside collar to seal air drafts from wall.

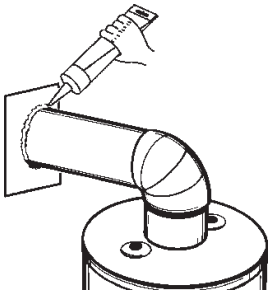

FIGURE 31

OPTIONAL VERTICAL VENT KIT # 900124-6 WITH STANDARD HORIZONTAL VENT KIT INSTALLATION #2

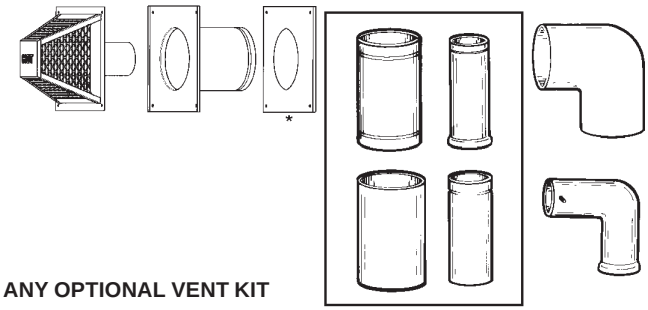

FIGURE 32

The opening through the wall should be cut at this time. If it hasn't been, refer back to that section.

1. First it must be determined how far the vertical (3" dia.) telescoping flue sections are set and locked together using the two screws supplied as shown below.

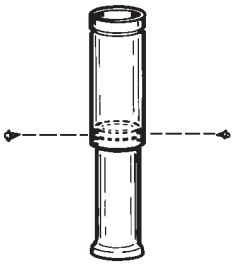

FIGURE 33

Use the simple equation below, chart and drawing to find the length of expansion of the telescoping flue sections. Because of manufacturing tolerances, place the telescoping extension on the water heater and adjust the height ("X" Dimension) and mark the point. Once the length has been determined, lock the two sections together by drilling two holes (180° apart) in the pipe and securing with the screws supplied.

EQUATION: C - A -10" = X

*GALLON CAPACITY	*BTU's in 1000's NAT/L.P.	A
40	36/36	48-3/4
50	38/38	57-1/2
40	40/40	48-3/4
50	48/44	61
75	55 NAT.	63

* See models and rating plate attached to the water heater for specific model number and other detailed information.

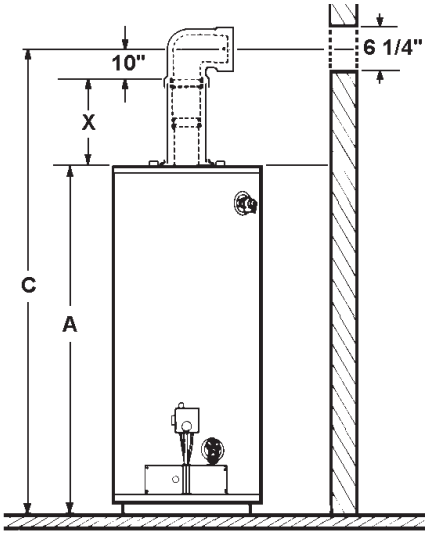

FIGURE 34

NOTE: EACH PART HAS BEEN STAMPED WITH A PART NUMBER.

2. Set the vertical (3" diameter) telescoping flue section in place on the flue collar. Using a #22 drill bit, drill two holes (180° apart) and secure the vertical assembly to the flue collar.

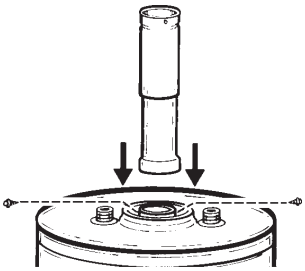

FIGURE 35

3. Slide the 6" vent telescoping section apart to reveal the beads. Using the caulking supplied, fill the beads.

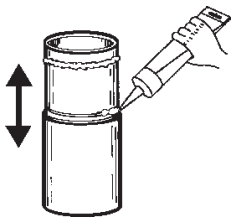

FIGURE 36

Downloaded from www.Manualslib.com manuals search engine

4. Using the tube of sealant supplied, run an ample amount around the oval flare of the jacket.

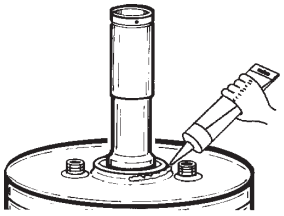

FIGURE 37

5. Place the 6” vent section over the 3” flue section. Subtract 3/4” from the X dimension used earlier and this gives the length of the 6” vent extension. Slide the 6” vent extension apart to this dimension and lock it together using the two screws supplied.

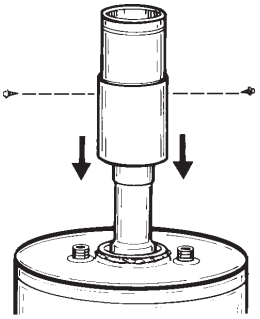

FIGURE 38

6. Bend the round end of the 6” vent extension oval at the jacket top and secure it using four sheet metal screws.

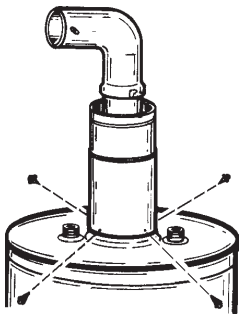

FIGURE 39

7. Place the 3” elbow on the flue extension.

NOTE: Make sure elbow is properly aligned to opening in the outside wall.

Mark the 3” dia. end of the flue extension at the slots the elbow. Using a #22 drill bit, drill holes into the flue extension at the two slots and secure the elbow to the flue extension using the screws provided.

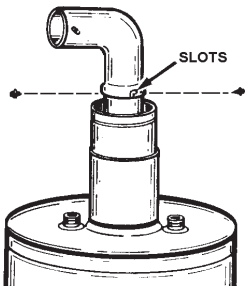

FIGURE 40

8. Making sure the 6” diameter elbow is centered around the 3” diameter flue, secure the 6” diameter vent pipe using two sheet metal screws at the connection of the elbow and 6” vertical extension.

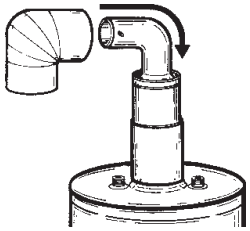

FIGURE 41

9. The standard vent kit includes a 6” diameter extension pipe which is used when “E” dimension over 6 1/2”.

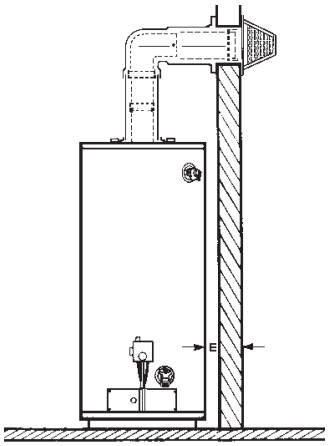

FIGURE 42

10. If “E” Dimension is less than 6 1/2” move to next step.

If “E” dimension is over 6 1/2”, assemble the 6” diameter extension pipe to the 6” diameter vent elbow and secure using two sheet metal screws. Using the tube of sealant supplied, run an ample amount around the joint to insure a good seal.

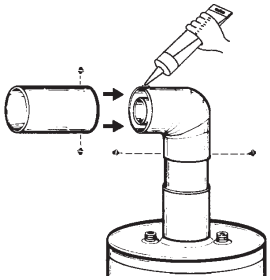

FIGURE 43

11. Slide the vent collar (to be installed later) over the 6” vent elbow.

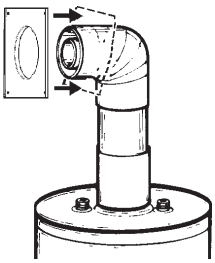

FIGURE 44

Downloaded from www.Manualslib.com manuals search engine

12. Place the water heater at the opening in the wall, at the predetermined clearance.

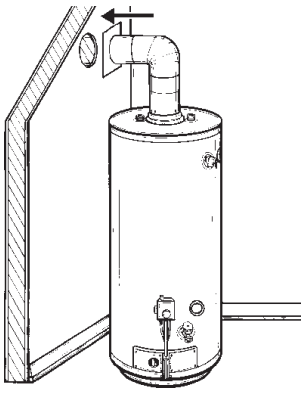

FIGURE 45

13. Move outdoors with all the remaining vent parts. Using the tube of sealant supplied, run an ample amount on the inside surface of the collar assembly that will contact the exterior wall and also fill the bead on the end of the 6" diameter vent collar.

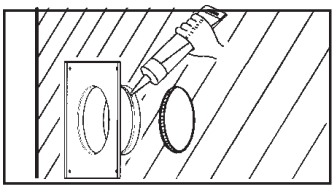

FIGURE 46

14. Install the vent collar assembly through the wall, connecting it to the extension and/or elbow (depending on which one was used).

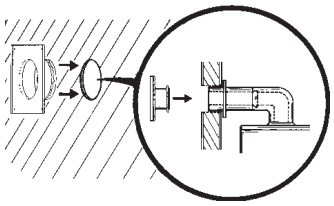

FIGURE 47

15. Four wood screws are supplied to temporarily attach the collar to the exterior wall of the building. However, other types of screws may have to be substituted depending on the construction of the exterior wall.

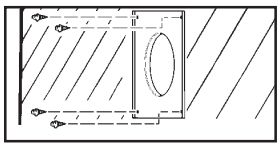

FIGURE 48

16. Insert the 3" diameter flue extension pipe into the vent collar assembly (flared & notched end first) and lock (turn clockwise to lock studs to slots) the flue extension pipe to the flue elbow.

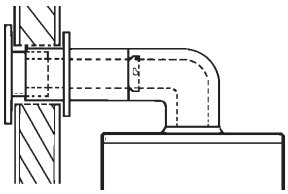

FIGURE 49

17. Connect the vent cap by sliding its end over the 3" diameter extension pipe and O-ring.

NOTE: To facilitate ease of assembly of the vent cap to the 3" pipe, a soap solution can be applied to the O-ring gasket.

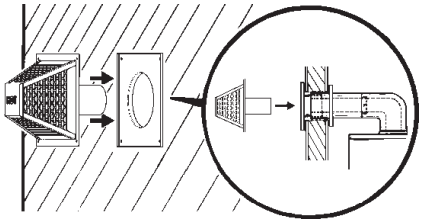

FIGURE 50

18. The vent cap has 4 holes around the outer edge. Remove the 4 screws used to temporarily attach the collar to the exterior wall. Then secure the vent cap assembly with the vent collar assembly to the exterior wall using the same 4 screws.

NOTE: Screws are supplied; however, substitution may be necessary depending on the exterior wall material.

CAUTION

To prevent unlocking the previously installed 3" diameter extension, the vent cap assembly must be rotated in a clockwise motion when the vent cap is installed.

19. Go back indoors to attach inside collar to the inside wall. Place the collar against the wall. Secure to wall by using 4 long sheet metal screws.

NOTE: Screws are supplied; however, substitution may be necessary depending on the interior wall material.

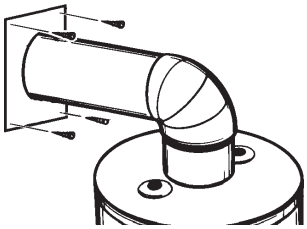

FIGURE 51

20. Using the tube of sealant supplied, run an ample amount of sealant around the edge of the vent pipe where it is inserted through the inside collar to seal air drafts from wall.

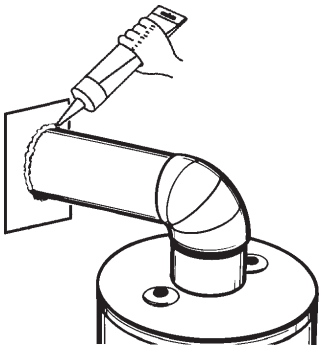

FIGURE 52

Downloaded from www.Manualslib.com manuals search engine

OPTIONAL HORIZONTAL VENT KIT #900124-7
INSTALLATION #3

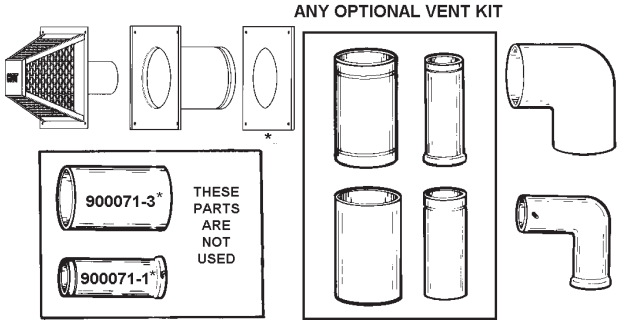

* Each part is stamped with a part number.

FIGURE 53

The opening through the wall should be cut at this time. If it hasn't been, refer back to that section.

1. Lock the elbow to the straight 3" flue pipe. Set the assembly in place on the end of the water heater's flue collar.

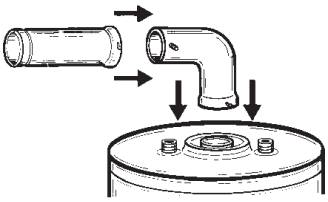

FIGURE 54

2. Mark the flue collar at the slots in the elbow. Using a #22 drill bit, drill holes into the flue collar at the two slots and secure the elbow to the flue collar using the screws provided.

   NOTE: Make sure elbow is properly aligned to opening in the outside wall.

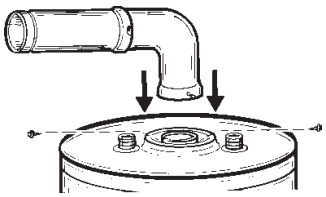

FIGURE 55

3. Using the tube of sealant supplied, run an ample amount around the oval flare of the jacket.

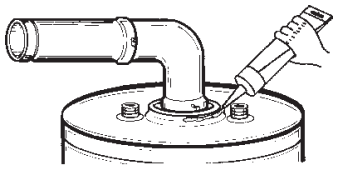

FIGURE 56

4. First remove the 3" horizontal extension from the elbow. Starting with the long end (with four securing holes), place the 6" diameter vent elbow over the 3" diameter elbow. Bend the round end "oval" to fit the flared oval end of the jacket top.

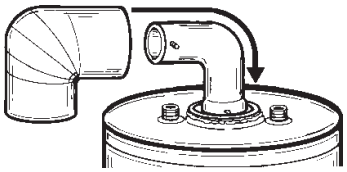

FIGURE 57

5. Making sure the 6" diameter elbow is centered around the 3" diameter flue, secure the 6" diameter vent pipe using four sheet metal screws at the connection of the jacket top.

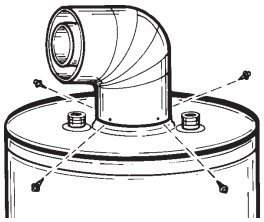

FIGURE 58

6. The standard kit includes a single piece of 3" flue and 6" vent pipe which will not be used in conjunction with the horizontal kit.

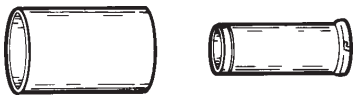

FIGURE 59

7. Slide the vent collar (to be installed later) over the 6" vent elbow.

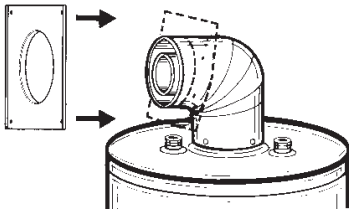

FIGURE 60

8. Place the water heater at the opening in the wall, at the predetermined clearance.

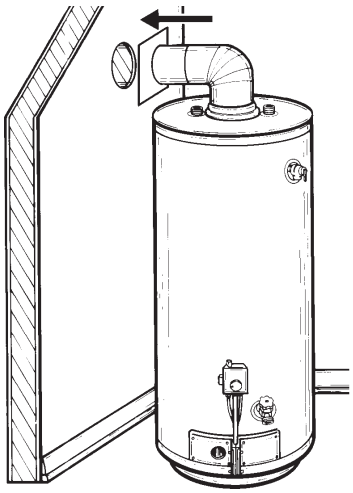

FIGURE 61

Downloaded from www.Manualslib.com manuals search engine

9. Slide the 6” telescoping vent section apart to reveal the beads.

   NOTE: The section of 6” pipe with beads will connect to the elbow. Using the caulking supplied, fill the beads.

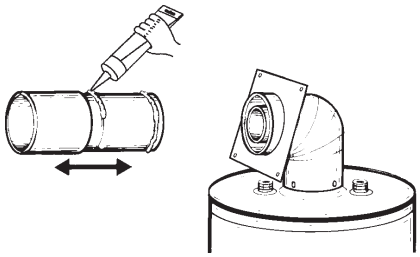

FIGURE 62

10. Insert the 6” telescoping vent section into the wall.

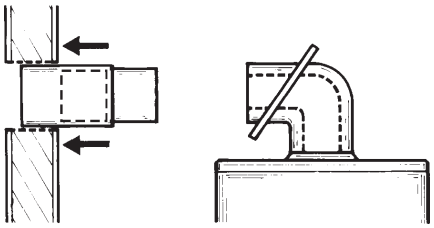

FIGURE 63

11. Move outdoors with all the remaining vent parts. Using the tube of sealant supplied, run an ample amount on the inside surface of the collar assembly that will contact the exterior wall and also fill the bead on the end of the 6” diameter vent collar.

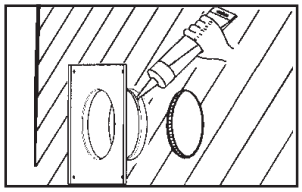

FIGURE 64

12. Install the vent collar assembly through the wall, connecting it to the 6” telescoping extension. Remember, the extension is not connected yet and it may be necessary to go back indoors and push it back up for a tight fit to the collar.

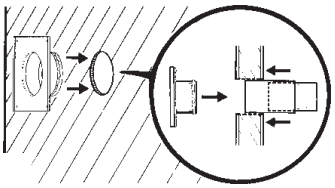

FIGURE 65

13. Four wood screws are supplied to temporarily attach the collar to the exterior wall to the building. However, other types of screws may have to be substituted depending on the construction of the exterior wall.

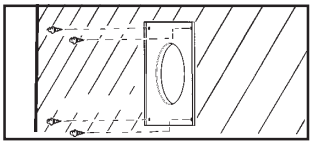

FIGURE 66

14. Place the vent cap in the vent collar assembly.

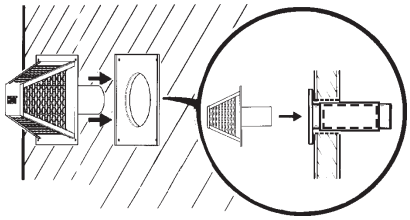

FIGURE 67

15. The vent cap has 4 holes around the outer edge. Remove the 4 screws used to temporarily attach the collar to the exterior wall. Then secure the vent cap assembly with the vent collar assembly to the exterior wall using the same 4 screws.

    NOTE: Screws are supplied; however, substitution may be necessary depending on the exterior wall material.

16. Move indoors to complete the assembly process.

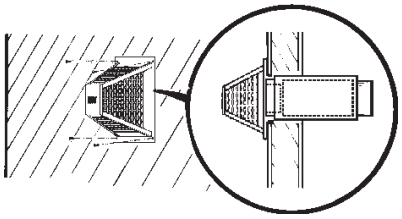

FIGURE 68

17. Collapse the 6” flue extension assembly as shown and install the 3” extension by first slipping the end with the O-ring approximately 1 1/4” into the end of the vent cap. Lock the other end of the 3” extension to the studs in the elbow.

    NOTE: To facilitate ease of assembly of the vent cap to the 3” pipe, a soap solution can be applied to the O-ring gasket.

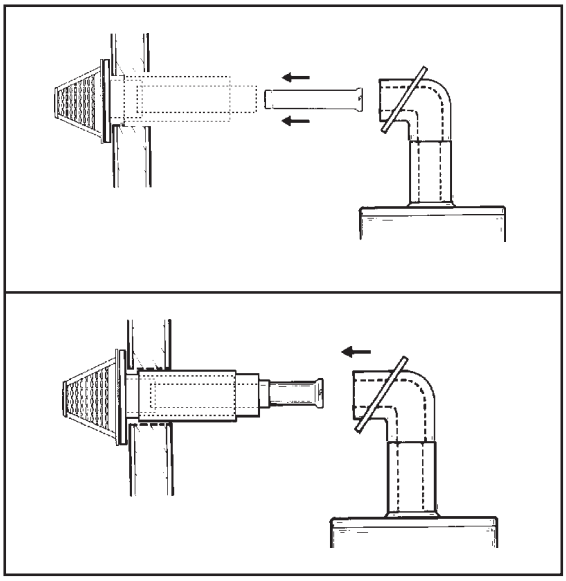

FIGURE 69

18. Using a #22 drill bit, drill holes 180° apart at the connection point of the two 3” flue extensions. Then using 2 screws provided, lock these pipes together.

Downloaded from www.Manualslib.com manuals search engine

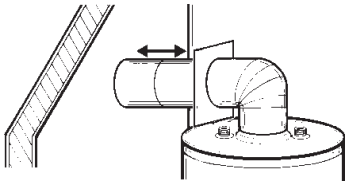

FIGURE 70

19. Now the 6” vent extension pipes can be expanded to connect at the vent elbow.

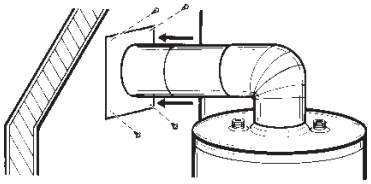

FIGURE 71

20. Pull the vent collar from the elbow to be against the wall and secure it using the screws provided.

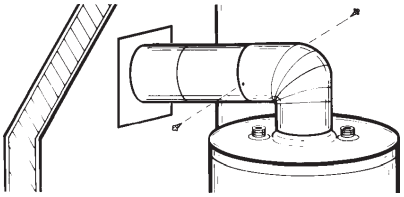

FIGURE 72

21. Lock the 6” vent extension to the vent elbow by using two screws provided, placing them 180° apart.

OPTIONAL VERTICAL AND HORIZONTAL VENT KIT #900124-8 INSTALLATION #4

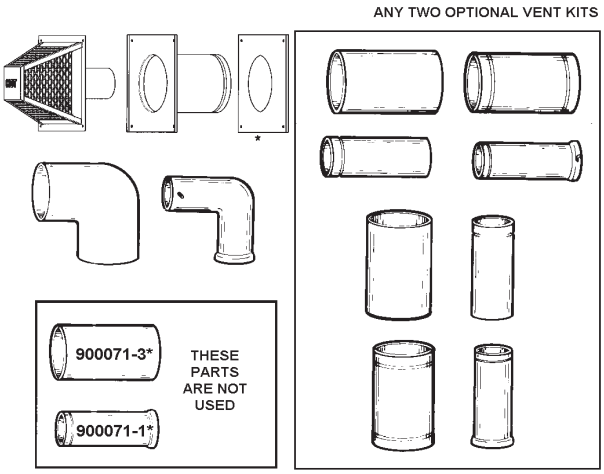

* Each part is stamped with a part number.

FIGURE 73

The opening through the wall should be cut at this time. If the opening has not been cut, refer back to that section.

1. First it must be determined how far the vertical (3” dia.) telescoping flue sections are set and locked together using the two screws supplied as shown below.

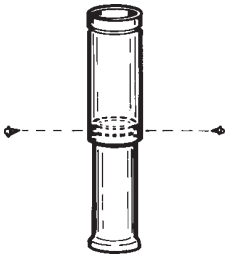

FIGURE 74

Use the simple equation below, chart and drawing to find the length of expansion of the telescoping flue sections. Because of manufacturing tolerances, place the telescoping extension on the water heater and adjust the height (“X” Dimension) and mark the point. Once the length has been determined, lock the two sections together by drilling two holes (180° apart) in the pipe and securing with the screws supplied.

EQUATION: C - A - 10” = X

*GALLON CAPACITY	*BTU’s in 1000’s NATURAL	A
40	36/36	48-3/4
50	38/38	57-1/2
40	40/44	48-3/4
50	48/44	61
75	55 NAT.	63

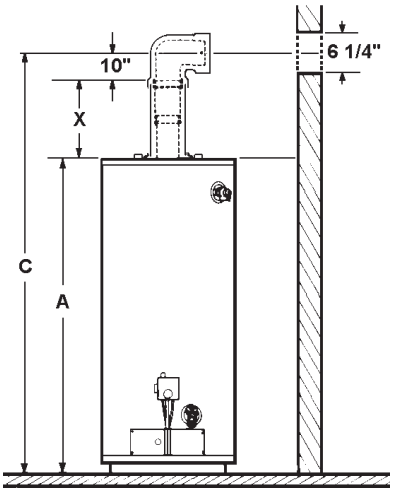

* See models and rating plate attached to the water heater for specific model number and other detailed information.

FIGURE 75

2. Set the vertical (3” dia.) telescoping flue section in place on the flue collar. Using a #22 drill bit, drill two holes (180° apart) and screw the vertical assembly to the flue collar.

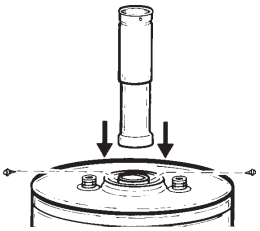

FIGURE 76

3. Slide the 6” vent telescoping section apart to reveal the beads. Using the caulking supplied, fill the beads.

Downloaded from www.Manualslib.com manuals search engine

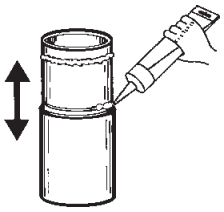

FIGURE 77

4. Using the tube of sealant supplied, run an ample amount around the oval flare of the jacket.

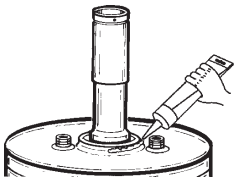

FIGURE 78

5. Place the 6” vent section over the 3” flue section. Subtract 3/4” from the X dimension used earlier and this gives the length of the 3” vent extension. Slide the 6” vent extension apart to this dimension and lock it together using the two screws supplied.

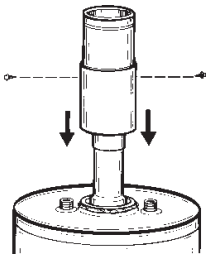

FIGURE 79

6. Bend the round end of the 6” vent extension oval at the jacket tip and secure it using four sheet metal screws.

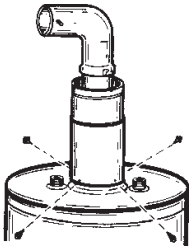

FIGURE 80

7. Place the 3” elbow on the flue extension.

   NOTE: Make sure elbow is properly aligned to opening in the outside wall.

Mark the 3” dia. end of the flue extension at the slots in the elbow. Using a #22 drill bit, drill holes into the flue extension at the two slots and secure the elbow to the flue extension using the screws provided.

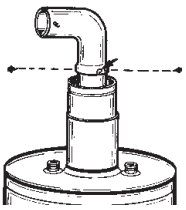

FIGURE 81

8. The standard kit includes a single piece of 3” flue and 6” vent pipe which will not be used in conjunction with the optional horizontal kit.

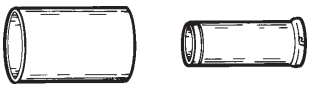

FIGURE 82

9. Making sure the 6” diameter elbow is centered around the 3” diameter flue, secure the 6” diameter vent pipe using two sheet metal screws at the connection of the elbow and 6” vertical extension.

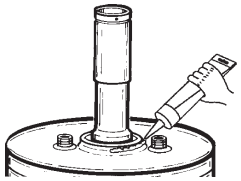

FIGURE 83

10. Slide the vent collar (to be installed later) over the 6” vent elbow.

11. Place the water heater at the opening in the wall, at the predetermined clearance.

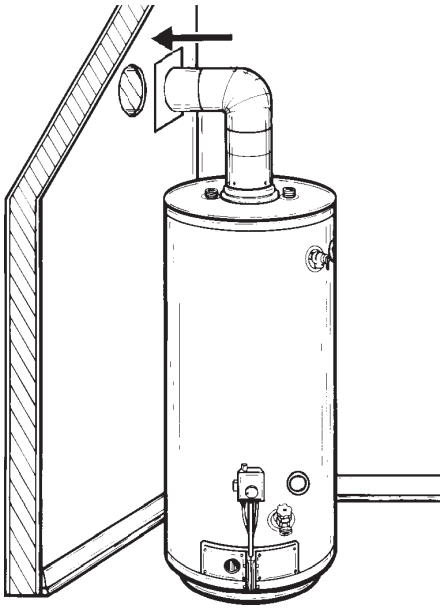

FIGURE 84

12. Slide the 6” telescoping vent section apart to reveal the beads.

    NOTE: The 6” pipe with beads will connect to the elbow. Using the caulking supplied, fill the beads.

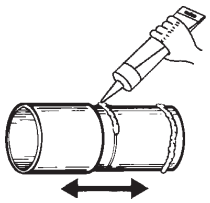

FIGURE 85

13. Insert the 6” telescoping vent section into the wall.

Downloaded from www.Manualslib.com manuals search engine

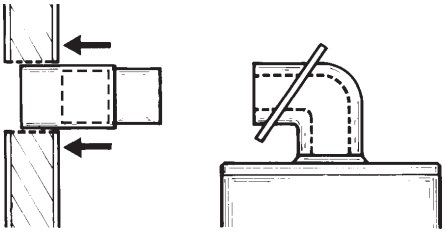

FIGURE 86

14. Move outdoors with all the remaining vent parts. Using the tube of sealant supplied, run an ample amount on the inside surface of the collar assembly that will contact the exterior wall and also fill the bead on the end of the 6" diameter vent collar.

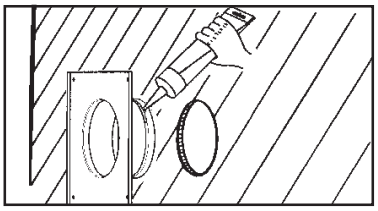

FIGURE 87

15. Install the vent collar assembly through the wall, connecting it to the 6" telescoping extension. Remember, the extension is not connected yet and it may be necessary to go back indoors and push it back up for a tight fit to the collar.

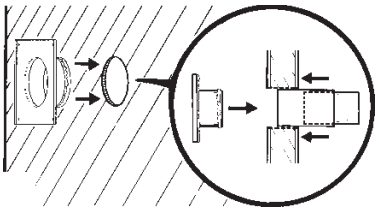

FIGURE 88

16. We have supplied 4 wood screws to temporarily attach the collar to the exterior wall of the building. However, other types of screws may have to be substituted depending on the construction of the exterior wall.

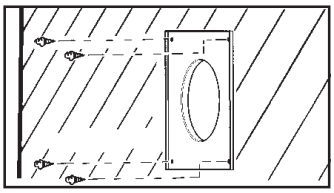

FIGURE 89

17. Place the vent cap in the vent collar assembly.

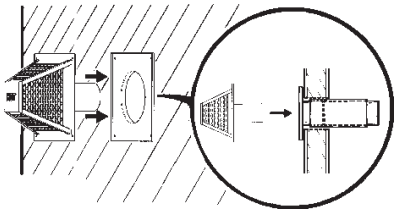

FIGURE 90

18. The vent cap has 4 holes around the outer edge. Remove the 4 screws used to temporarily attach the collar to the exterior wall. Then secure the vent cap assembly with the vent collar assembly to the exterior wall using the same 4 screws.

    NOTE: Screws are supplied; however, substitution may be necessary depending on the exterior wall material.

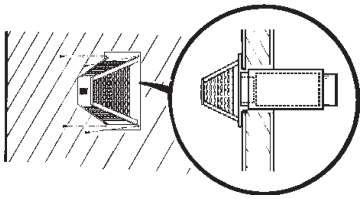

FIGURE 91

19. Move indoors to complete the assembly process.

20. Collapse the 6" vent extension pipes as shown below and install the 3" extension by first slipping the end with the O-ring approximately 1 1/4" into the end of the vent cap. Lock the other end of the 3" extension assembly to the studs in the elbow.

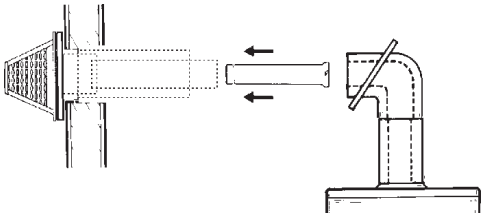

FIGURE 92

NOTE: To facilitate ease of assembly of the vent cap to the 3" pipe, a soap solution can be applied to the O-ring gasket.

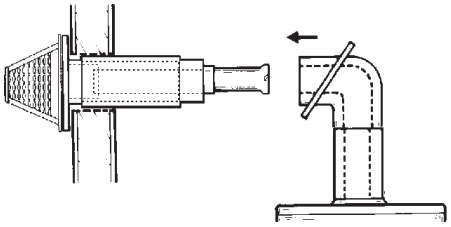

FIGURE 93

21. Using a #22 drill bit, drill holes 180° apart at the connection point of the two 3" flue extensions. Then using 2 screws provided, lock these pipes together.

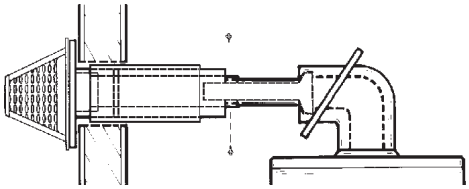

FIGURE 94

22. Now the 6" vent extension pipes can be expanded to connect at the vent elbow.

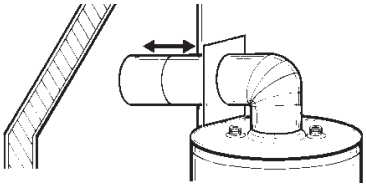

FIGURE 95

Downloaded from www.Manualslib.com manuals search engine

23. Pull the vent collar from the elbow to be against the wall and secure it using the screws provided.

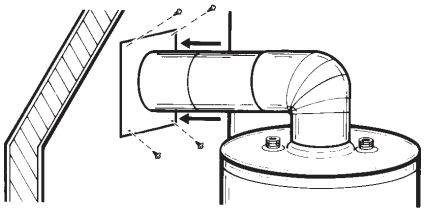

FIGURE 96

24. Lock the 6" vent extension to the vent elbow by using two screws provided, placing them 180° apart.

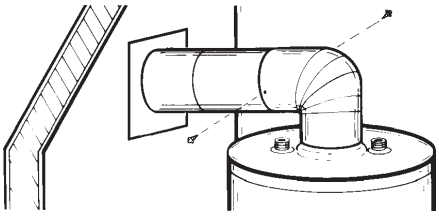

FIGURE 97

T & P VALVE AND PIPE INSULATION

Remove insulation for T & P valve and pipe connections from carton.

Fit pipe insulation over the incoming cold water line and the hot water line. Make sure that the insulation is against the top cover of the heater.

Fit T & P valve insulation over valve. Make sure that the insulation does not interfere with the lever of the T & P valve.

Secure all insulation using tape.

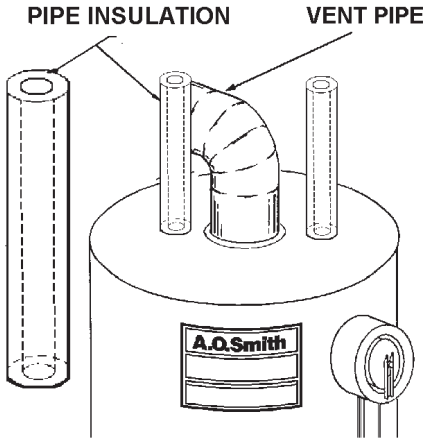

FIGURE 98

OPERATION

NEVER OPERATE THE HEATER WITHOUT FIRST BEING CERTAIN IT IS FILLED WITH WATER AND A TEMPERATURE AND PRESSURE RELIEF VALVE IS INSTALLED IN THE RELIEF VALVE OPENING OF THE HEATER. DO NOT ATTEMPT TO OPERATE HEATER WITH COLD WATER INLET VALVE CLOSED.

FILLING

1. Close the heater drain valve (Fig. 1) by turning handle clockwise.
2. Open a nearby hot water faucet to permit the air in the system to escape.
3. Fully open the cold water inlet pipe valve (Fig. 1) allowing the heater and piping to be filled.
4. Close the hot water faucet as water starts to flow.
5. The heater is ready to be operated.

HIGH ALTITUDE INSTALLATIONS

WARNING

INSTALLATIONS ABOVE 2,000 FT. REQUIRE REPLACEMENT OF THE BURNER ORIFICE IN ACCORDANCE WITH THE NATIONAL FUEL GAS CODE (ANSI Z223.1/NFPA 54). FAILURE TO REPLACE THE ORIFICE COULD RESULT IN IMPROPER AND INEFFICIENT OPERATION OF THE APPLIANCE, PRODUCING CARBON MONOXIDE GAS IN EXCESS OF SAFE LIMITS, WHICH COULD RESULT IN SERIOUS PERSONAL INJURY OR DEATH. CONTACT YOUR GAS SUPPLIER FOR ANY SPECIFIC CHANGES WHICH MAY BE REQUIRED IN YOUR AREA.

A. O. Smith builds models specifically for high altitude service. Please check the rating plate before making changes.

TEMPERATURE REGULATION

DANGER

THIS WATER HEATER IS EQUIPPED WITH AN ADJUSTABLE THERMOSTAT TO CONTROL WATER TEMPERATURE. HOT WATER TEMPERATURES REQUIRED FOR AUTOMATIC DISHWASHER AND LAUNDRY USE CAN CAUSE PAINFUL SCALDING WITH POSSIBLE SERIOUS AND PERMANENT INJURY. THE TEMPERATURE AT WHICH INJURY OCCURS VARIES WITH THE PERSON'S AGE AND THE TIME OF THE EXPOSURE. THE SLOWER RESPONSE TIME OF CHILDREN, AGED OR DISABLED PERSONS INCREASES THE HAZARDS TO THEM. NEVER ALLOW SMALL CHILDREN TO USE A HOT WATER TAP, OR TO DRAW THEIR OWN BATH WATER. NEVER LEAVE A CHILD OR DISABLED PERSON UNATTENDED IN A BATHTUB OR SHOWER.

THE WATER HEATER SHOULD BE LOCATED IN AN AREA WHERE THE GENERAL PUBLIC DOES NOT HAVE ACCESS. IF A SUITABLE AREA IS NOT AVAILABLE, A COVER SHOULD BE INSTALLED OVER THE THERMOSTAT TO PREVENT TAMPERING. Suitable covers are available through A.O. Smith Water Products Company, 500 Tennessee Waltz Parkway, Ashland City, TN 37015. Phone: 1-800-433-2545, fax: 1-800-433-2515, email: www.parts@hotwater.com.

Downloaded from www.Manualslib.com manuals search engine

FOR YOUR SAFETY READ BEFORE LIGHTING

WARNING
If you do not follow these instructions exactly, a fire or explosion may result causing property damage, personal injury or loss of life.

A. This appliance has a pilot which is lit by a piezo-electric spark gas ignition system. Do not remove the access doors of the appliance and try to light the pilot by hand.

B. BEFORE LIGHTING smell all around the appliance area for gas. Be sure to smell next to the floor because some gas is heavier than air and will settle on the floor.
WHAT TO DO IF YOU SMELL GAS
- Do not try to light any appliance.
- Do not touch any electric switch; do not use any phone in your building.
- Immediately call your gas supplier from a neighbor's phone. Follow the gas supplier's instructions.
- If you cannot reach your gas supplier, call the fire department.

C. Use only your hand to push in or turn the gas control knob. Never use tools. If the knob will not push in or turn by hand, don't try to repair it, call a qualified service technician. Force or attempted repair may result in a fire or explosion.

D. Do not use this appliance if any part has been under water. Immediately call a qualified installer or service agency to replace a flooded water heater. Do not attempt to repair the unit! It must be replaced!

LIGHTING INSTRUCTIONS

1. STOP! Read the safety information above on this label.
2. Set the thermostat to lowest setting (PILOT LIGHTING). Turn the thermostat dial fully clockwise ( ) until it stops as shown.

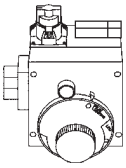

3. Turn gas control knob clockwise to "OFF" position. Knob cannot be turned from "PILOT" to "OFF" unless knob is depressed slightly. **DO NOT USE FORCE**.
4. Wait five (5) minutes to clear out any gas. If you then smell gas, STOP! Follow "B" in the safety information above on this label. If you don't smell gas, go to the next step.
5. If you don't smell gas, turn knob on gas control counter clockwise to "PILOT" position.
6. Pilot can be viewed through observation port. Note location of piezo ignitor.

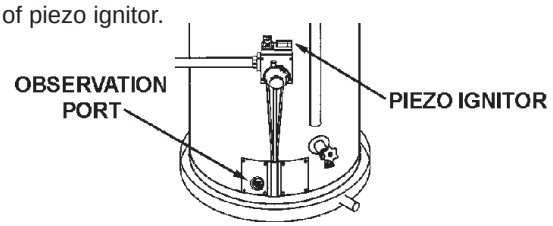

7. Depress the gas control knob all the way down. Immediately depress the piezo ignitor button until a click is heard and then release. Check to see if pilot is lit through the observation port. If pilot is not lit, continue to depress and release piezo ignitor button up to six (6) times. If pilot is still not lit, repeat steps 3 through 7. After the pilot is lit, continue to hold control knob down for about one (1) minute. Release knob and it will pop back up. Pilot should remain lit. If it goes out repeat steps 2 through 7.
   - If knob does not pop up when released, stop and immediately call your service technician or gas supplier.
   - If the pilot will not stay lit after several tries, depress and turn the gas control knob clockwise to "OFF" and call your service technician or gas supplier.
8. Turn gas control knob counter-clockwise to the full "ON" position. **WARNING Do not use gas control knob to regulate gas flow.**
9. Set the thermostat to desired setting. The mark (▲) indicative of approximately 120°F is preferred starting point. Some local laws may require a lower starting point. If hotter water is desired, see instruction manual and "warning" below.

WARNING
Hotter water increases the risk of scald injury. Before changing temperature setting see instruction manual.

TO TURN OFF GAS TO APPLIANCE

1. Set the thermostat to lowest setting (PILOT LIGHTING). Turn the thermostat dial fully clockwise ( ) until it stops as shown.

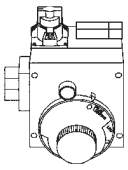

2. Turn gas control knob clockwise to "OFF" position. Knob cannot be turned from "PILOT" to "OFF" unless knob is depressed slightly. **DO NOT FORCE**

Downloaded from www.Manualslib.com manuals search engine

It is recommended that lower water temperatures be used to avoid the risk of scalding. It is further recommended, in all cases, that the water temperature dial, Figure 99, be set for the lowest temperature which satisfies your hot water needs. This will also provide the most energy efficient operation of the water heater. The water temperature adjusting dial was factory set at the lowest temperature; all the way clockwise to the mechanical stop. Turning the dial counterclockwise increases temperature and clockwise reduces temperature.

SETTING THE WATER HEATER TEMPERATURE AT 120°F (APPROX. "▲" MARK ON FACE OF THERMOSTAT) WILL REDUCE THE RISK OF SCALDS. Some states require settings at specific lower temperatures.

Figure 99 shows the approximate water temperatures produced at various thermostat dial settings. Short repeated heating cycles caused by small hot water uses can cause temperatures at the point of use to exceed the thermostat setting by up to 30°F. If you experience this type of use you should consider using lower temperature settings to reduce scald hazards.

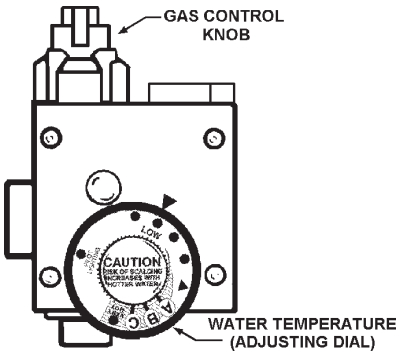

Temperature Setting	Time to Produce 2nd & 3rd Degree Burns on Adult Skin
VERY HOT= approx. 160°F	About 1/2 second
C = approx. 150°F	About 1-1/2 seconds
B = approx. 140°F	Less than 5 seconds
A = approx. 130°F	About 30 seconds
▲ = approx. 120°F	More than 5 minutes
LOW = approx. 80°F	

FIGURE 99

Valves for reducing point-of-use temperature by mixing cold and hot water are available (See Fig. 2). Also available are inexpensive devices that attach to faucets to limit hot water temperatures. Contact a licensed plumber or the local plumbing authority.

SHOULD OVERHEATING OCCUR OR THE GAS SUPPLY FAIL TO SHUT OFF, TURN OFF THE MAIN MANUAL GAS CONTROL VALVE TO THE APPLIANCE (SEE FIGURE 1).

HOME OWNER

MAINTENANCE

FOR YOUR SAFETY AND SATISFACTORY OPERATION, IT IS RECOMMENDED THAT THIS HEATER BE CHECKED ONCE A YEAR BY A COMPETENT SERVICE PERSON.

USERS OF THIS APPLIANCE SHOULD BE AWARE THAT GAS COMPONENTS WEAR OUT OVER A PERIOD OF TIME. THE GAS CARRYING COMPONENTS OF THIS APPLIANCE SHOULD BE INSPECTED FOR PROPER OPERATION PERIODICALLY BY A QUALIFIED SERVICE TECHNICIAN.

PILOT AND MAIN BURNER

Check pilot and main burner every six months for proper flame characteristics. This is done by removing door on heater, fig. 1. The main burner should provide complete combustion of gas; ignite rapidly; give reasonably quiet operation; cause no excessive flame lifting from burner ports. Make sure that the flow of combustion and ventilation air is not blocked.

If proper flame characteristics are not evident, check for accumulation of lint or other foreign material that restricts or blocks the air openings in the heater or burner.

WARNING

SOOT BUILD-UP INDICATES A PROBLEM THAT REQUIRES CORRECTION BEFORE FURTHER USE. CONSULT WITH A QUALIFIED SERVICE TECHNICIAN.

Should the main burner or burner air openings require cleaning, turn the gas control knob to "OFF" position and allow the burner to cool. Remove the burner and clean with a soft brush. Clean main burner orifice with a suitable soft material.

HIGH TEMPERATURE LIMIT SWITCH
(Single-Use Type Energy Cut Off)

The thermostat has a built-in limit switch which will extinguish the pilot light in case of excessive water temperatures. The pilot cannot be relit until the entire thermostat (labeled as single-use type) is replaced. It is important that a serviceman be called to determine the reason for limit operation and thus avoid repeated thermostat replacement. Lower the temperature adjustment dial setting on the new control.

VENTING

HAVE VENTING SYSTEM CHECKED EVERY SIX MONTHS FOR OBSTRUCTIONS AND/OR DETERIORATION IN VENT PIPING.

TEMPERATURE & PRESSURE RELIEF VALVE

At least once a year, the temperature and pressure relief valve, fig. 1. must be checked to ensure that it is in operating condition. Lift the lever at the top of the valve several times until the valve seats properly and operates freely.

If water does not flow, remove the valve and inspect for obstructions or corrosion. Have a qualified servicer replace with a new valve of the recommended size as necessary. Do not attempt to repair the valve, as this could result in improper operation and a tank explosion. In areas with poor water conditions, it may be necessary to inspect the T&P valve more frequently.

WARNING

THE WATER PASSING OUT OF THE VALVE DURING THIS CHECKING OPERATION MAY BE EXTREMELY HOT. AVOID CONTACT AND DISCHARGE SAFELY TO PREVENT WATER DAMAGE.

DRAINING

If the heater is to be shut off and exposed to freezing temperatures, it must be drained. Water, if left in the tank and allowed to freeze, will damage the heater.

Downloaded from www.Manualslib.com manuals search engine

- Turn off the gas and cold water inlet valve to the heater, fig. 1.
- Open a nearby hot water faucet and the heater drain valve.
- BE CAREFUL TO GRASP THE DRAIN VALVE HANDLE SO THAT THE HAND IS NOT EXPOSED TO HOT WATER. IF DESIRED, A HOSE MAY BE CONNECTED TO THE DRAIN VALVE TO CARRY THE WATER AWAY.

DANGER

The water CAN BE HOT.

- The drain valve must be left open during the shutdown period.
- To restart heater, refer to the FILLING instructions under OPERATION.

Periodically open the drain valve and allow the water to run until it flows clean. This will help prevent sediment build-up in the tank.

It is normal for lime and scale deposits to form within the tank. Such deposits will not be removed by periodic draining. It is necessary to chemically delime the affected parts in water areas where such deposits are encountered. Contact your dealer or plumber for deliming information.

CONDENSATION

Combustion products contain water vapor which can condense on the cooler surfaces of the tank forming droplets which drip into the fire or run out on the floor. This is common at the time of startup, after installation, during periods of time when incoming water is very cold, or the heater may be undersized for the requirements.

Occasional or steady water leakage from the bottom of the flue may be caused by corrosive combustion products or an improper vent. Check with your dealer for more information.

CATHODIC PROTECTION - ANODE

The anode rod within the tank is designed to be slowly consumed cathodically, minimizing corrosion in the glass-lined tank. A hydrogen sulfide (rotten egg) odor may result if water contains high sulfate and/or minerals. Chlorinating the water supply should minimize the problem. (See EXTENDED NON-USE PERIODS).

NOTE: Anode must remain installed (except for inspection) to avoid shortening tank life. See LIMITED WARRANTY. Replace as necessary.

ANODE ROD MAINTENANCE

The anode rod is used to protect the tank from corrosion. Most hot water tanks are equipped with an anode rod. The submerged rod sacrifices itself to protect the tank. Instead of corroding the tank, water ions attack and eat away the anode rod. This does not affect the water's taste or color. The rod must be maintained to keep the tank in operating condition.
Anode deterioration depends on water conductivity, not necessarily water condition. A corroded or pitted anode rod indicates high water conductivity and should be checked and/or replaced more often than an anode rod that appears to be intact. Replacement of a depleted anode rod can extend the life of your water heater. Inspection should be conducted by a qualified technician, and at a minimum should be checked annually after the warranty period.

CAUTION

Before removing the anode: 1) the tank water should be cool, 2) the cold water shut off valve must be closed, and 3) water pressure must be relieved by opening a nearby faucet.

Downloaded from www.Manualslib.com manuals search engine

TROUBLESHOOTING

Please check guidelines below. For your safety, water heater service should be performed only by a qualified service technician. Read the GENERAL SAFETY INFORMATION section first.

PROBLEM	POSSIBLE MALFUNCTION	SERVICE TO BE PERFORMED	POSSIBLE SOLUTION
NO HOT WATER	1) No pilot		
	A. No gas to pilot	Check gas supply	Turn on, check pressure
		Check gas valve	Turn on or replace if needed
		Check pilot orifice for obstruction	Clean with air or replace
		Check pilot tube for kink or leaks	Replace pilot tube
	B. Pilot will not stay lit	Check gas pressure	
		Check thermostat MV drop-out voltage	
		Check thermocouple connection and MV output	Tighten if loose, replace as necessary
		Check thermocouple placement in pilot flame	3/8- should be in flame
		Check pilot for proper flame	Change pilot orifice
		Check ECO operation Check for air in pilot tube	Replace gas valve Bleed as necessary
	C. Pilot blows out	Leaking joints	Check all vent joints for proper seal. Make sure to check inner and outer pipe and check rear air tube seals. Refer to installation manual.
		Check for proper vent cap	Install A. O. Smith provided vent cap
		Check for bent, missing, or mislocated pilot shield (natural gas units only)	Replace or reposition
		Check outer door seal	Replace gasket if missing Tighten screws if loose Install gasket properly if misinstalled
NOT ENOUGH HOT WATER	1) Incorrect burner orifice	Check orifice size	Replace with correct size
	2) No gas to main burner	Check gas supply	Correct as needed
		Check thermostat operation	Replace as needed
	3) Heater too small	Confirm sizing requirements	Replace with larger heater, add another heater, or decrease water usage.
YELLOW FLAMES OR SOOT	1) Excessive or low gas pressure	Check gas pressure	
	2) Combustion air restricted	Check vent for restrictions	Correct as necessary
		Check venting for extra piping	Re-install as recommended in the installation manual
CONDENSATION	1) Water on floor under heater	See page 21 “CONDENSATION”	
BURNER WILL NOT STAY LIT	1) Low gas pressure	Check gas supply pressure	
		Check thermostat operation	
	2) Downdraft or backdraft condition	Check for proper vent cap	Install proper vent cap
		Check location of heater	Re-install in correct location
		Check for proper vent sealing	Reseal venting
		Check top and/or bottom air supply box for air leaks	Seal as necessary
		Check outer door seal	Replace gasket, tighten screws or re-install gasket as necessary

Downloaded from www.Manualslib.com manuals search engine

LIMITED RESIDENTIAL GAS WARRANTY

THIS WARRANTY IS APPLICABLE TO THE ORIGINAL OWNER ONLY. If the glass lined tank in this water heater shall prove upon examination by A. O. Smith Corporation (the warrantor) to have leaked during the warranty period in normal residential use, due to natural corrosion from potable water therein, the warrantor will furnish the ORIGINAL OWNER a replacement A. O. Smith water heater of equivalent size and current model, or a replacement part for any thermostat or thermocouple which fails in normal use, in accordance with the warranty terms and conditions specified below. THE A. O. SMITH REPLACEMENT MODEL OR PART WILL BE WARRANTED FOR ONLY THE UNEXPIRED PORTION OF THE ORIGINAL WARRANTY. The warranty period will be determined by the original installation date of the water heater. PROOF-OF-PURCHASE AND PROOF-OF-INSTALLATION ARE NECESSARY TO VALIDATE THIS WARRANTY. This warranty is not transferable and applies to models listed in Table 1.

TABLE 1.

	WARRANTY PERIOD	
MODEL	TANK[1]	PARTS[2]
GDVH/GDVS	6 YEARS	6 YEARS
XDVS	10 YEARS	6 YEARS

When the water heater has been used for other than single family residential application; 1. The tank warranty shall be reduced to 1 year for 6 year models and 3 years for 10 year models. 2. The parts warranty shall be reduced to 1 year for all models. Returned parts which meet any of the following conditions are not covered by this warranty: 1) improper installation or removal, 2) damaged by other than normal wear, 3) replaced for cosmetic purposes, or 4) returned with defaced date codes.

CONDITIONS AND EXCEPTIONS

This warranty shall apply only when the water heater is installed and operated in accordance with 1) all local fire codes and plumbing codes, ordinances and regulations, 2) the printed instructions provided with it, 3) good industry practices, and 4) proper safety practices such as but not limited to a properly sized drain pan if installed in an area where leakage from connections of the tank would result in damage to the area adjacent to the heater. In addition, a new temperature and pressure relief valve, certified by the American Gas Association must have been properly installed and piped to the nearest drain.

This warranty shall apply only when the heater is:

- owned by the original purchaser;
- used at temperatures not exceeding the maximum calibrated setting of its thermostat;
- not subjected to excessive water pressure fluctuations and not subject to an operating pressure greater than 150 P.S.I.;
- filled with potable water, free to circulate at all times and with the tank free of damaging water sediment or scale deposits;
- used in a non-corrosive and non-contaminated atmosphere;
- used with factory approved anode(s) installed;
- in its original installation location;
- in the United States, its territories or possessions, and Canada;
- sized in accordance with proper sizing techniques for residential water heaters;
- bearing a rating plate which has not been altered, defaced or removed except as required by the warrantor;
- not used in a closed system without a properly sized and installed thermal expansion tank;
- fired at the factory rated input using the fuel stated on the face of the rating plate;
- operated with the inner and outer combustion chamber doors in place.
- maintained in accordance with the instructions printed in the manual included with the heater.

Any accident to the water heater or any part thereof (including freezing, fire, floods, or lightning), any misuse, abuse or alteration of it, any operation of it in a modified form, or any attempt to repair tank leaks or parts will void this warranty.

SERVICE AND LABOR RESPONSIBILITY

UNDER THIS LIMITED WARRANTY, THE WARRANTOR WILL PROVIDE ONLY A REPLACEMENT WATER HEATER OR PART THEREOF. THE OWNER IS RESPONSIBLE FOR ALL OTHER COSTS. Such costs may include but are not limited to:

a. Labor charges for service, removal, or reinstallation of the water heater or part thereof.
b. Shipping and delivery charges for forwarding the new water heater or replacement part from the nearest distributor and returning the claimed defective heater or part to such distributor except in the state of California where such charges are the manufacturer's responsibility.
c. All cost necessary or incidental for handling and administrative charges, and for any materials and/or permits required for installation of the replacement heater or part.

LIMITATION ON IMPLIED WARRANTIES

Implied warranties, including any warranty of merchantability imposed on the sale of this heater under state law are limited to one year duration for the heater or any of its parts. Some states do not allow limitations on how long an implied warranty lasts, so the above limitations may not apply to you.

CLAIM PROCEDURE

Any claim under this warranty should be initiated with the dealer who sold the heater, or with any other dealer handling the warrantor's products. If this is not practical, the owner should contact: A. O. Smith Water Products Company, 500 Tennessee Waltz Parkway, Ashland City, TN 37015 (800) 323-2636. Canadian customers should contact A. O. Smith Enterprises, Ltd., P.O. Box 310-768 Erie Street, Stratford, Ontario N5A 6T3, (519) 271-5800.

The warrantor will only honor replacement with identical or similar water heater or parts thereof which are manufactured or distributed by the warrantor.

Dealer replacements are made subject to in-warranty validation by warrantor.

PROOF-OF-PURCHASE AND PROOF-OF-INSTALLATION DATE ARE REQUIRED TO SUPPORT WARRANTY CLAIM FROM ORIGINAL OWNER. THIS FORM DOES NOT CONSTITUTE PROOF-OF-PURCHASE OR PROOF-OF-INSTALLATION.

DISCLAIMERS

NO EXPRESS WARRANTY HAS BEEN OR WILL BE MADE IN BEHALF OF THE WARRANTOR WITH RESPECT TO THE MERCHANTABILITY OF THE HEATER OR THE INSTALLATION, OPERATION, REPAIR OR REPLACEMENT OF THE HEATER OR PARTS. THE WARRANTOR SHALL NOT BE RESPONSIBLE FOR WATER DAMAGE, LOSS OF USE OF THE UNIT, INCONVENIENCE, LOSS OR DAMAGE TO PERSONAL PROPERTY, OR OTHER CONSEQUENTIAL DAMAGE. THE WARRANTOR SHALL NOT BE LIABLE BY VIRTUE OF THIS WARRANTY OR OTHERWISE FOR DAMAGE TO ANY PERSONS OR PROPERTY, WHETHER DIRECT OR INDIRECT, AND WHETHER ARISING IN CONTRACT OR IN TORT.

Some states do not allow the limitation or exclusion of incidental or consequential damages, so the above limitation or exclusion may not apply to you.

This warranty gives you specific legal rights, and you may also have other rights which vary from state to state.

IMPORTANT INFORMATION

Model Number _____

Serial Number _____

Installation Information _____

Date Installed _____

Company's Name _____

Street or P.O. Box _____

City, State, and Zip Code _____

Phone Number _____

Plumber's Name _____

Downloaded from www.Manualslib.com manuals search engine

NOTES

Downloaded from www.Manualslib.com manuals search engine

NOTES

Downloaded from www.Manualslib.com manuals search engine

Downloaded from www.Manualslib.com manuals search engine

A.O.Smith
Water Heaters

500 TENNESSEE WALTZ PARKWAY, ASHLAND CITY, TN 37015
PHONE: 1-800-433-2545 FAX: 1-800-433-2515
www.aosmithwaterheaters.com / email: parts@hotwater.com

Downloaded from www.Manualslib.com manuals search engine